Sumter City-County Zoning Board of Appeals

October 8, 2025

BOA 25-26, 1242 Alice Dr (City)

The applicant (Duke Energy Progress, Inc.) is requesting that the Sumter City-County Board of Zoning Appeals grant special exception approval for establishment of a +/- 120 ft. tall monopole telecommunications tower in a residential zoning district pursuant to *Article 3, Exhibit 3-5: Permitted Uses in All Zoning Districts*; *Article 5.b.2. Enumeration of Certain Hazardous and/or Potentially Disruptive Land Development Activities*; and *Article 5.b.4: Communication Towers and Antennae* of the *City of Sumter Zoning & Development Standards Ordinance*. The telecommunications tower is proposed to be located in the area of an existing electrical utility substation on the property. The property is located at 1242 Alice Dr., is zoned Residential-15 (R-15), and is represented by TMS# 203-00-05-005.

Sumter
SOUTH CAROLINA

Appeals - Variance - Special Exception

Sumter City-County
Zoning Board of Appeals

October 8, 2025

<u>BOA 25-26, 1242 Alice Dr (City)</u>

I. THE REQUEST

Applicant:	Duke Energy Progress Inc.
Status of the Applicant:	Authorized Agent
Request:	Special Exception approval to establish a monopole telecommunications tower.
City Council Ward	Ward 6
Location:	1242 Alice Dr.
Present Use/Zoning:	Duke Energy Electrical Substation / Residential-15 (R-15)
Tax Map Reference:	203-00-05-005

II. BACKGROUND

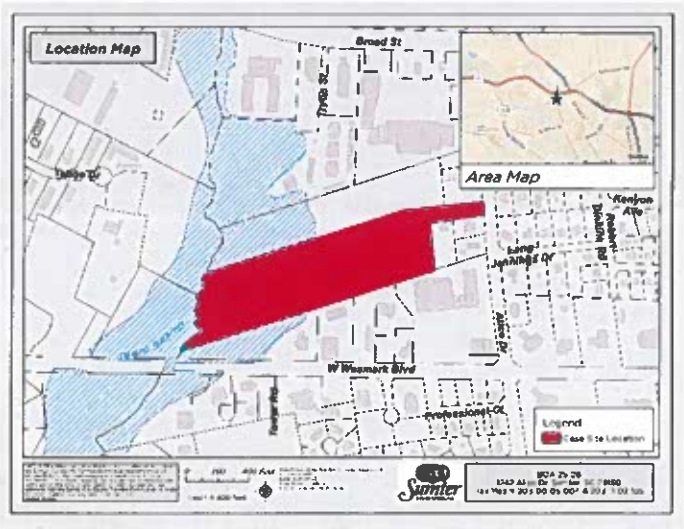

The applicant requests approval to construct a 120 ft. tall monopole telecommunications tower on property addressed as 1242 Alice Dr. The location of the property is marked in red on the map to the right. As shown in **Figure 1,** on page 2 of this report, the proposed location for the tower is near the center of the property adjacent to the existing electrical substation and is over 200 ft. from all property lines.

Duke Energy is requesting approval to place the tower to enhance internal communications. The improved infrastructure will allow for faster notification of power outages in the area and more efficient coordination of response efforts.

Telecommunications towers (NAICS 517311) are considered Special Exception Uses in residential zoning districts. Special Exceptions are evaluated in accordance with *Article 1.h.4.c, Article 3.b.4.a.* and *Article 5.b.4.* of the *City of Sumter Zoning & Development Standards Ordinance.*

Figure 1: Proposed tower placement location

Figure 2: Photo of existing conditions at Alice Dr.

The applicant has submitted the following information in support of the application, as required under *Article 5.b.4.* These items are attached to this report as *Exhibits 1 -9*.

Items Needed	Date of Submission (Description as Needed)
1. Specifications	7-18-25
2. Site Plan	7-18-25
3. Tower Location Map	7-18-25 • The property is owned by Duke Energy and is zoned R-15.
4. Antenna Capacity/Wind Load	7-18-25
5. Antenna Ownership	7-18-25
6. Owner Authorization	7-18-25 • Duke owns the Property, and has previously developed it with a substation
7. FCC License	7-18-25
8. Visual Impact Analysis	7-18-25 • The proposed tower, antenna or accessory structure will be placed on site in such a manner that it will minimize the visual impact on the surrounding properties
9. Removal Agreement	8-14-25
10. Conditions Met	Staff evaluation: all *Article 5* conditions appear to have been met, subject to Board of Zoning Appeals Decision regarding Special Exception.

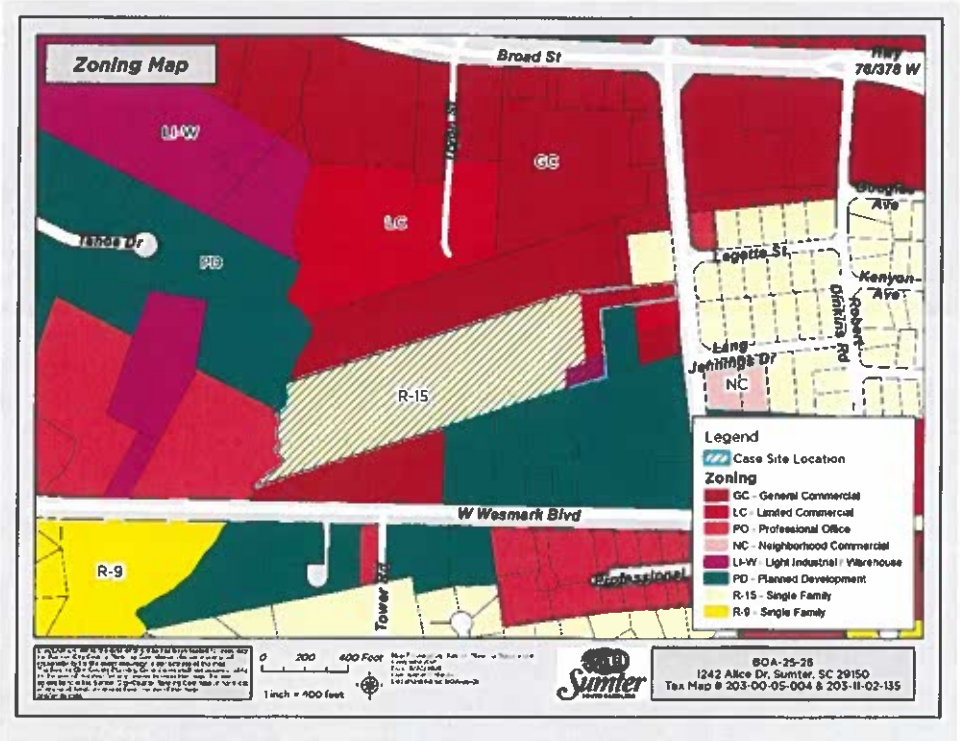

Figure 3: Zoning Map

III. SPECIAL EXCEPTION REVIEW CRITERIA

In Residential-15 (R-15) zoning districts, communication towers are special exception uses requiring the review and approval of the Board of Zoning Appeals. Special exception requests for telecommunications towers are evaluated in accordance with *Article 1.h.4.c.* and *Article 5.b.4.*

Article 1.h.4.c: Special Exceptions

2. **Permits for Special Exceptions shall be evaluated by the Board of Zoning Appeals on the basis of the following criteria:**

   a. **That the Special Exception complies with all applicable development standards contained elsewhere in this Ordinance, including landscaping and bufferyards, off-street parking, and dimensional requirements;**

      Staff Review: The proposed tower will be located adjacent to the existing Duke Energy Electrical Substation. Based on a staff evaluation, the site meets minimum development standards applicable to the proposed use, not including the special design criteria in *Article 5.b.4.*

   b. **That the special exception will be in substantial harmony with the area in which it is located;**

      Staff Review: The property is zoned Residential-15 (R-15) and is located within the Suburban Development Planning Area as outlined in the 2040 Comprehensive Land Use Plan. The property that surrounds the parcel is a combination of commercial and light industrial zoning and use. Staff is of the opinion that the construction of the proposed tower will be harmonious with the surrounding area.

   c. **That the special exception will not discourage or negate the use of surrounding property for use(s) permitted by right.**

      Staff Review: The proposed tower will be set back over 200 ft. from all property lines and is not expected to cause any negative impacts that would discourage or negate use of surrounding properties.

Article 5.b.4. Communication Towers and Antennas:

1. **Location and Visual Impact:** The proposed tower, antenna or accessory structure will be placed on site in such a manner that it will minimize the visual impact on the surrounding properties;

   Staff Review: According to the submitted visual impact analysis, visibility of the tower from surrounding properties and rights-of-way will be limited. The property is

naturally buffered by surrounding vegetation which will serve as a visual screen reducing visibility.

2. **Inability to locate on existing structures:** The applicant must show that a proposed antenna and equipment cannot be accommodated and function as required by applicable regulations and the applicants' technical design requirements without unreasonable modifications on any existing structure or tower under control of applicant, or to locate on an available and suitable nearby tower at reasonable costs (i.e., at or below local area rent average);

   Staff Review: The property is owned by Duke Energy, which has an electric substation on the site. The proposed communication tower would be an operational addition to the existing facility, as it is specifically designed to interface with the substation and enhance response times in the event of an emergency/power outage.

3. **Necessity for location in residential district:** The applicant must show that the portion of the city and/or county intended to receive coverage cannot be adequately served by a communications tower or antenna placed in a non-residential district for valid technical reasons;

   Staff Review: The property, acquired by Duke Energy in 1993, is zoned Residential-15 (R-15). As previously mentioned, a Duke Energy electric utility substation already exists on the site, which is a permitted by-right use in a residential zone.

4. **Public property or other private property not suitable:** Prior to consideration of a permit for location on private property which must be acquired, the applicant must show that available publicly owned sites, and available privately owned sites occupied by a compatible use, are unsuitable for operation of the facility under applicable communications regulations and the applicant's technical design requirements;

   Staff Review: The subject property is owned by Duke Energy, and this tower is specifically to serve the substation as part of Duke's communications and monitoring systems.

5. **Design for multiple use:** Applicants must show that a new tower is designed to accommodate additional antennae equal to applicant's present and future requirements;

   Staff Review: According to the applicant, no additional antennas from other telecommunications providers will be permitted due to operational security and safety concerns, as the tower will be located within the electric substation and the tower's purpose is to facilitate the company's communications with elements of the electrical grid.

6. **Safety Codes Met:** Applicant must show that all applicable health, nuisance, fire, building, and life safety code requirements are met;

Staff Review: The applicant must obtain all required building permits. The Sumter City-County building inspections department will inspect the construction project to ensure that code requirements are met.

7. **Paint and illumination:** A communications tower must not be painted or illuminated unless otherwise required by state or federal regulations.

   Staff Review: The tower will meet FCC and FAA requirements for visibility, no other painting or illumination is proposed.

8. **Distance from existing tower:** A permit for a proposed tower site within 1,000 ft of an existing tower shall not be issued unless the applicant certifies that the existing tower does not meet the applicants structural specifications and design requirements, or that a co-location agreement could not be obtained;

   Staff Review: The unique nature of this tower, serving as a communications link between Duke Energy's facilities and the substation on the property, also means that no existing tower in the vicinity is able to meet the applicant's technical specifications.

9. **Indemnity and claims resolution:** The applicant must show by certification from a registered professional engineer that the proposed facility will contain only equipment meeting FCC rules, and must file with the Zoning Administrator a written indemnification of the city or county of Sumter and proof of liability insurance or financial ability to respond to claims up to $1,000,000.00 in the aggregate which may arise from the operation of the facilities during its life, at no cost to the city and county and in a form approved by the City of County Attorneys.

   Staff Review The applicant has submitted proof of adequate insurance.

10. **Minimum Setback:** A tower must be set back from all lot lines by a distance equal to the district setback requirement or 100% of the tower height, whichever is greater;

    Staff Review: The proposed tower is to be set back from all lot lines by a height equal to or greater than 120 ft. (height of the tower).

11. **Technical Assistance:** Prior to issuing a permit, the Zoning Administrator may make use of professional technical services to determine if the standards in *Article 5.b.4.d.* are met;

    Not Applicable

12. **Maintenance:** The communications tower shall be maintained by common corrosion control procedures so it continuously maintains a minimum visual impact on surrounding properties.

Staff Review: The proposed tower will be maintained by Duke Energy.

IV. STAFF RECOMMENDATION

Staff recommends no additional conditions of approval *if* the Board makes the necessary findings to approve this request.

V. DRAFT MOTIONS for BOA-25-26

A. I move the Zoning Board of Appeals **approve** BOA-25-26, subject to the findings of fact and conclusions developed by the BZA and so stated:

B. I move the Zoning Board of Appeals **deny** BOA-25-26, subject to the following findings of fact and conclusions:

C. I move the Zoning Board of Appeals enter an alternative motion for BOA-25-26.

VI. BOARD OF APPEALS – October 8, 2025

Date: **07/02/2025**

Robert Jackson
Sr Telecom Analyst
Duke Energy
910-523-8708
Robert.Jackson3@duke-energy.com

ENGINEERED TOWER SOLUTIONS
Engineered Tower Solutions, PLLC
3227 Wellington Court
Raleigh, NC 27615
(919) 782-2710

Subject:	**Structural Analysis Report**	
Duke Energy Designation:	**Duke Energy Site Name:**	Sumter Alice Drive 230 Sub
Engineering Firm Designation:	**ETS, PLLC Job Number:**	24131424.STR.3852
Site Data:	**1242 Alice Drive, Sumter, Sumter County, SC 29150** **Latitude *33° 57' 10.27"*, Longitude *-80° 23' 26.51"*** **120-ft AGL Valmont H10 (Concrete Caisson) – Monopole**	

Dear Robert Jackson,

Engineered Tower Solutions, PLLC is pleased to submit this **"Structural Analysis Report"** to determine the structural integrity of the above-mentioned tower.

The purpose of the analysis is to determine acceptability of the tower stress level. Based on our analysis we have determined the tower stress level for the structure and foundation, under the following load case, to be:

Final Equipment Configuration:	**Tower:**	**93.4%**	**Sufficient Capacity**
	Foundation:	**70.6%**	**Sufficient Capacity**

This analysis has been performed in accordance with the 2021 International Building Code based upon an ultimate 3-second gust wind speed of 132 mph. Applicable standard references and design criteria are listed in Section 2 - Analysis Criteria.

Structural Analysis Report prepared by:

Hicham Anssar
Structural Engineer I

Respectfully submitted by:

Christopher G. Ply, PE, SE
President/CEO

SOUTH CAROLINA LICENSED PROFESSIONAL ENGINEER No. 22960 CHRISTOPHER G. PLY

SOUTH CAROLINA ENGINEERED TOWER SOLUTIONS, PLLC No. 4634 CERTIFICATE OF AUTHORIZATION

07/02/2025

TABLE OF CONTENTS

1) INTRODUCTION

2) ANALYSIS CRITERIA
- Table 1 - Proposed Equipment Configuration
- Table 2 - Other Considered Equipment

3) ANALYSIS PROCEDURE
- Table 3 - Documents Provided
- 3.1) Analysis Method
- 3.2) Assumptions

4) ANALYSIS RESULTS
- Table 4 - Section Capacity (Summary)
- Table 5 - Tower Component Stresses vs. Capacity
- 4.1) Recommendations
- 4.2) Dish Deflection Table

5) APPENDIX A
- tnxTower Output

6) APPENDIX B
- Pole Design Specifications

7) APPENDIX C
- Foundation Design Drawings

8) APPENDIX D
- Additional Calculations

1) INTRODUCTION

The tower is a 120.0-ft Valmont Class H10 baseplated monopole designed by Valmont. The foundation is to be a concrete caisson designed by ETS. See Appendix B for monopole specifications and Appendix C for foundation specifications.

2) ANALYSIS CRITERIA

Building Code:	2021 IBC
TIA-222 Revision:	TIA-222-H
Risk Category:	III
Wind Speed:	132 mph
Exposure Category:	C
Topographic Factor:	1
Ice Thickness:	1.0 in
Wind Speed With Ice:	30 mph
Service Wind Speed:	60 mph

Table 1 - Proposed Equipment Configuration

Mounting Level (ft)	Center Line Elevation (ft)	Number of Antennas	Antenna Manufacturer	Antenna Model	Number of Feed Lines	Feed Line Size (in)
117.0 (Duke Energy)	117.0	1	Radiowaves	HPD6-5.2	1	CAT5E
		1	Cambium	PMP450I Non-Integrated		
		2	Tower Mounts	Stiff Arm/Stabilizer Bar		
		1	SitePro 1	DCH8 Chain Mount		
		1	Tower Mount	2.375"ø x 2-ft Pipe Mount		
		1	Tower Mount	4.5"ø x 5-ft Pipe Mount		

Table 2 - Other Considered Equipment

Mounting Level (ft)	Center Line Elevation (ft)	Number of Antennas	Antenna Manufacturer	Antenna Model	Number of Feed Lines	Feed Line Size (in)
90.0 * (Future)	90.0	9	JMA	X7CQAP-86-880-VR0	15	1-5/8 Hybrid
		9	Ericsson	RRUS 32		
		3	Raycap	DC6-48-60-18-8C		
		1	Perfect-Vision	PV-LPPGS-12M-HR2-AP19-AT (12.5 ft Platform Mount)		

***Future LTE loading considered in this analysis.**

3) ANALYSIS PROCEDURE

Table 3 - Documents Provided

Document	Remarks	Reference	Source
Tower Design Drawings	Valmont (Project No. 508946)	05/25/2021	On File
LINKPlanner Installation Report	Cambium (Job No. DEP 04-04-23_png)	10/25/2024	On File
Geotechnical Report	ETS, PLLC (Job No. 24131424)	06/13/2025	On File
Foundation Design Drawings	ETS, PLLC (Job No. 24131424.STR.3851)	07/02/2025	Appendix C

3.1) Analysis Method

tnxTower (version 8.3.1.2), a commercially available analysis software package, was used to create a three-dimensional model of the tower and calculate member stresses for various loading cases. Selected output from the analysis is included in Appendix A.

3.2) Assumptions

1) Tower and structures were built and have been maintained in accordance with the manufacturer's specifications.
2) The configuration of antennas, transmission cables, mounts and other appurtenances are as specified in Table(s) 1 and 2 and the referenced drawings.
3) The proposed cables were assumed to be banded to the exterior of the pole.
4) Proposed anchor rods unbraced length (lar) from top of concrete to underside of leveling nut must not exceed 2.25".

This analysis may be affected if any assumptions are not valid or have been made in error. Engineered Tower Solutions, PLLC should be notified to determine the effect on the structural integrity of the tower.

4) ANALYSIS RESULTS

Table 4 - Section Capacity (Summary)

Section No.	Elevation (ft)	Component Type	Size	Critical Element	P (K)	SF*P_allow (K)	% Capacity	Pass / Fail
L1	120 - 70.75	Pole	TP24.87x17x0.22	1	-5.974	988.912	58.8	Pass
L2	70.75 - 31	Pole	TP30.78x23.75x0.28	2	-11.257	1572.100	93.4	Pass
L3	31 - 0	Pole	TP35.17x29.42x0.38	3	-19.110	2457.880	89.7	Pass
							Summary	
						Pole (L2)	93.4	Pass
						RATING =	**93.4**	**Pass**

Table 5 - Tower Component Stresses vs. Capacity

Notes	Component	Elevation (ft)	% Capacity	Pass / Fail
1	Anchor Rods	0	84.8	Pass
1	Base Plate	0	54.5	Pass
1	Concrete Caisson (Structural)	0	60.8	Pass
1	Concrete Caisson (Soil Interaction)	0	70.6	Pass

Structure Rating (max from all components) =	**93.4%**

Notes:
1) See additional documentation in "Appendix C - Additional Calculations" for calculations supporting the % capacity consumed.

4.1) Recommendations

The tower and its foundation have sufficient capacity to carry the final load configuration. No modifications are required at this time.

4.2) Proposed Dish Antenna Deflection Results

As requested, the results of the tilt and twist values for a 60 mph 3-second gust service wind speed per the TIA-222-H standard are given below:

Critical Deflections and Radius of Curvature - Service Wind

Elevation ft	*Appurtenance*	*Gov. Load Comb.*	*Deflection* in	*Tilt* °	*Twist* °	*Radius of Curvature* ft
117.00	HPD6-5.2	42	19.37	1.29	0.02	48704

APPENDIX A

TNXTOWER OUTPUT

Section	Length (ft)	Number of Sides	Thickness (in)	Socket Length (ft)	Top Dia (in)	Bot Dia (in)	Grade	Weight (K)
1	49.25	12	0.22	4.25	17.00	24.87	A572-65	2.4
2	44.00	12	0.28	5.00	23.75	30.78	A572-65	3.7
3	36.00	12	0.38		29.42	35.17	A572-65	4.7
								10.8

120.0 ft

70.8 ft

31.0 ft

0.0 ft

DESIGNED APPURTENANCE LOADING

TYPE	ELEVATION	TYPE	ELEVATION
1/2-in x 4-ft Lightning Rod	120	(3) X7CQAP-86-880-VR0	90
4.5" x 5-ft Pipe Mount w/ DCH8 Chain Mount	117	(3) RRUS 32	90
		(3) RRUS 32	90
2.4" x 2-ft Pipe Mount	117	(3) RRUS 32	90
(2) Pipe Mount/Stabilizer	117	DC6-48-60-18-8C	90
PMP 450i	117	DC6-48-60-18-8C	90
HPD6-5.2	117	DC6-48-60-18-8C	90
(3) X7CQAP-86-880-VR0	90	PV-LPPGS-12M-HR2-AP19	90
(3) X7CQAP-86-880-VR0	90		

MATERIAL STRENGTH

GRADE	Fy	Fu	GRADE	Fy	Fu
A572-65	65 ksi	80 ksi			

TOWER DESIGN NOTES

1. Tower designed for Exposure C to the TIA-222-H Standard.
2. Tower designed for a 132 mph basic wind in accordance with the TIA-222-H Standard.
3. Tower is also designed for a 30 mph basic wind with 1.00 in ice. Ice is considered to increase in thickness with height.
4. Deflections are based upon a 60 mph wind.
5. Tower Risk Category III.
6. Topographic Category 1 with Crest Height of 0.00 ft
7. TOWER RATING: 93.4%

ALL REACTIONS ARE FACTORED

AXIAL 34 K

SHEAR 2 K

MOMENT 122 kip-ft

TORQUE 0 kip-ft
30 mph WIND - 1.00 in ICE

AXIAL 19 K

SHEAR 26 K

MOMENT 1870 kip-ft

TORQUE 7 kip-ft
REACTIONS - 132 mph WIND

Engineered Tower Solutions, PLLC
3227 Wellington Ct.
Raleigh, NC 27615
Phone: (919) 782-2710
FAX: 919-782-2710

Job: *Sumter Alice Drive 230 Sub*			
Project: *ETS, PLLC Job No. 24131424.STR.3852*			
Client: Duke Energy	Drawn by: hicham.anssar		App'd:
Code: TIA-222-H	Date: 07/01/25		Scale: NTS
Path:			Dwg No. E-1

Tower Input Data

The tower is a monopole.
This tower is designed using the TIA-222-H standard.
The following design criteria apply:

Tower base elevation above sea level: 166.26 ft.
Basic wind speed of 132 mph.
Risk Category III.
Exposure Category C.
Simplified Topographic Factor Procedure for wind speed-up calculations is used.
Topographic Category: 1.
Crest Height: 0.00 ft.
Nominal ice thickness of 1.00 in.
Ice thickness is considered to increase with height.
Ice density of 56 pcf.
A wind speed of 30 mph is used in combination with ice.
Temperature drop of 50 °F.
Deflections calculated using a wind speed of 60 mph.
Non-linear (P-delta) analysis was used.
Pressures are calculated at each section.
Stress ratio used in pole design is 1.
Local bending stresses due to climbing loads, feed line supports, and appurtenance mounts are not considered.

Options

Consider Moments - Legs
Consider Moments - Horizontals
Consider Moments - Diagonals
Use Moment Magnification
√ Use Code Stress Ratios
√ Use Code Safety Factors - Guys
Escalate Ice
Always Use Max Kz
Kz In Exposure D Hurricane Region
Include Bolts In Member Capacity
Leg Bolts Are At Top Of Section
Secondary Horizontal Braces Leg
Use Diamond Inner Bracing (4 Sided)
SR Members Have Cut Ends
SR Members Are Concentric
Distribute Leg Loads As Uniform
Use Special Wind Profile

Assume Legs Pinned
√ Assume Rigid Index Plate
√ Use Clear Spans For Wind Area
Use Clear Spans For KL/r
Retension Guys To Initial Tension
√ Bypass Mast Stability Checks
√ Use Azimuth Dish Coefficients
√ Project Wind Area of Appurtenances
Alternative Appurt. EPA Calculation
Autocalc Torque Arm Areas
Add IBC .6D+W Combination
√ Sort Capacity Reports By Component
Triangulate Diamond Inner Bracing
Treat Feed Line Bundles As Cylinder
Ignore KL/ry For 60 Deg. Angle Legs
Use ASCE 10 X-Brace Ly Rules

Calculate Redundant Bracing Forces
Ignore Redundant Members in FEA
SR Leg Bolts Resist Compression
All Leg Panels Have Same Allowable
Offset Girt At Foundation
√ Consider Feed Line Torque
Include Angle Block Shear Check
Use TIA-222-H Bracing Resist. Exemption
Use TIA-222-H Tension Splice Exemption

Poles

√ Include Shear-Torsion Interaction
Always Use Sub-Critical Flow
Use Top Mounted Sockets
Pole Without Linear Attachments
Pole With Shroud Or No Appurtenances
Outside and Inside Corner Radii Are Known

Tapered Pole Section Geometry

Section	Elevation ft	Section Length ft	Splice Length ft	Number of Sides	Top Diameter in	Bottom Diameter in	Wall Thickness in	Bend Radius in	Pole Grade
L1	120.00-70.75	49.25	4.25	12	17.00	24.87	0.22	0.88	A572-65 (65 ksi)
L2	70.75-31.00	44.00	5.00	12	23.75	30.78	0.28	1.12	A572-65

Section	Elevation ft	Section Length ft	Splice Length ft	Number of Sides	Top Diameter in	Bottom Diameter in	Wall Thickness in	Bend Radius in	Pole Grade
L3	31.00-0.00	36.00		12	29.42	35.17	0.38	1.50	(65 ksi) A572-65 (65 ksi)

Tapered Pole Properties

Section	Tip Dia. in	Area in^2	I in^4	r in	C in	I/C in^3	J in^4	It/Q in^2	w in	w/t
L1	17.52	11.83	425.34	6.01	8.81	48.30	861.86	5.82	3.97	18.124
	25.67	17.38	1348.31	8.83	12.88	104.66	2732.04	8.56	6.08	27.755
L2	25.19	21.24	1493.45	8.40	12.30	121.38	3026.14	10.45	5.61	19.974
	31.77	27.60	3276.46	10.92	15.94	205.50	6639.00	13.58	7.50	26.676
L3	31.15	35.07	3776.27	10.40	15.24	247.80	7651.75	17.26	6.88	18.345
	36.28	42.01	6492.67	12.46	18.22	356.39	13155.92	20.68	8.42	22.455

Tower Elevation ft	Gusset Area (per face) ft^2	Gusset Thickness in	Gusset Grade	Adjust. Factor A_f	Adjust. Factor A_r	Weight Mult.	Double Angle Stitch Bolt Spacing Diagonals in	Double Angle Stitch Bolt Spacing Horizontals in	Double Angle Stitch Bolt Spacing Redundants in
L1 120.00-70.75				1	1	1			
L2 70.75-31.00				1	1	1			
L3 31.00-0.00				1	1	1			

Feed Line/Linear Appurtenances - Entered As Round Or Flat

Description	Sector	Exclude From Torque Calculation	Component Type	Placement ft	Total Number	Number Per Row	Start/End Position	Width or Diameter in	Perimeter in	Weight plf
***										
Safety Line 3/8	C	No	Surface Ar (CaAa)	120.00 - 5.00	1	1	0.000 0.000	0.38		0.22
Step Pegs (5/8" SR) 7-in. w/ 30" Step	C	No	Surface Ar (CaAa)	120.00 - 5.00	2	2	0.000 0.000	0.35		0.49
***										
CAT5E(1/4)	A	No	Surface Ar (CaAa)	117.00 - 5.00	1	1	-0.100 0.100	0.25		0.10
***										
1 5/8	C	No	Surface Ar (CaAa)	90.00 - 5.00	15	8	-0.100 0.100	1.98		1.04
***										

Feed Line/Linear Appurtenances - Entered As Area

Description	Face or Leg	Allow Shield	Exclude From Torque Calculation	Component Type	Placement ft	Total Number	C_AA_A ft²/ft	Weight plf
***								

Feed Line/Linear Appurtenances Section Areas

Tower Section	Tower Elevation ft	Face	A_R ft²	A_F ft²	C_AA_A In Face ft²	C_AA_A Out Face ft²	Weight K
L1	120.00-70.75	A	0.000	0.000	1.156	0.000	0.005
		B	0.000	0.000	0.000	0.000	0.000
		C	0.000	0.000	35.786	0.000	0.359
L2	70.75-31.00	A	0.000	0.000	0.994	0.000	0.004
		B	0.000	0.000	0.000	0.000	0.000
		C	0.000	0.000	67.237	0.000	0.668
L3	31.00-0.00	A	0.000	0.000	0.650	0.000	0.003
		B	0.000	0.000	0.000	0.000	0.000
		C	0.000	0.000	43.979	0.000	0.437

Feed Line/Linear Appurtenances Section Areas - With Ice

Tower Section	Tower Elevation ft	Face or Leg	Ice Thickness in	A_R ft²	A_F ft²	C_AA_A In Face ft²	C_AA_A Out Face ft²	Weight K
L1	120.00-70.75	A	1.277	0.000	0.000	12.970	0.000	0.115
		B		0.000	0.000	0.000	0.000	0.000
		C		0.000	0.000	78.722	0.000	1.705
L2	70.75-31.00	A	1.200	0.000	0.000	11.147	0.000	0.099
		B		0.000	0.000	0.000	0.000	0.000
		C		0.000	0.000	119.210	0.000	3.107
L3	31.00-0.00	A	1.066	0.000	0.000	6.890	0.000	0.058
		B		0.000	0.000	0.000	0.000	0.000
		C		0.000	0.000	76.571	0.000	1.980

Feed Line Center of Pressure

Section	Elevation ft	CP_X in	CP_Z in	CP_X Ice in	CP_Z Ice in
L1	120.00-70.75	-0.09	4.10	-0.50	3.95
L2	70.75-31.00	-0.08	7.02	-0.46	6.36
L3	31.00-0.00	-0.07	6.50	-0.45	6.24

Note: For pole sections, center of pressure calculations do not consider feed line shielding.

Shielding Factor Ka

Tower Section	Feed Line Record No.	Description	Feed Line Segment Elev.	K_a No Ice	K_a Ice
L1	2	Safety Line 3/8	70.75 - 120.00	1.0000	1.0000
L1	3	Step Pegs (5/8" SR) 7-in. w/ 30" Step	70.75 - 120.00	1.0000	1.0000
L1	6	CAT5E(1/4)	70.75 - 117.00	1.0000	1.0000
L1	8	1 5/8	70.75 - 90.00	1.0000	1.0000
L2	2	Safety Line 3/8	31.00 - 70.75	1.0000	1.0000
L2	3	Step Pegs (5/8" SR) 7-in. w/ 30" Step	31.00 - 70.75	1.0000	1.0000
L2	6	CAT5E(1/4)	31.00 - 70.75	1.0000	1.0000
L2	8	1 5/8	31.00 - 70.75	1.0000	1.0000
L3	2	Safety Line 3/8	5.00 - 31.00	1.0000	1.0000
L3	3	Step Pegs (5/8" SR) 7-in. w/ 30" Step	5.00 - 31.00	1.0000	1.0000
L3	6	CAT5E(1/4)	5.00 - 31.00	1.0000	1.0000
L3	8	1 5/8	5.00 - 31.00	1.0000	1.0000

Discrete Tower Loads

Description	Face or Leg	Offset Type	Offsets: Horz Lateral Vert ft ft ft	Azimuth Adjustment °	Placement ft		C_AA_A Front ft^2	C_AA_A Side ft^2	Weight K
***									
1/2-in x 4-ft Lightning Rod	A	From Leg	0.00 0.00 2.00	0.00	120.00	No Ice 1/2" Ice 1" Ice	0.20 0.61 0.95	0.20 0.61 0.95	0.003 0.005 0.010
***									
4.5" x 5-ft Pipe Mount w/ DCH8 Chain Mount	C	From Leg	1.00 0.00 0.00	0.00	117.00	No Ice 1/2" Ice 1" Ice	1.49 2.08 2.40	1.49 2.08 2.40	0.054 0.070 0.090
2.4" x 2-ft Pipe Mount	C	From Leg	1.00 0.00 0.00	0.00	117.00	No Ice 1/2" Ice 1" Ice	0.36 0.49 0.63	0.36 0.49 0.63	0.027 0.031 0.037
(2) Pipe Mount/Stabilizer	C	From Leg	0.50 0.00 0.00	0.00	117.00	No Ice 1/2" Ice 1" Ice	0.42 0.57 0.73	0.42 0.57 0.73	0.040 0.046 0.052
PMP 4501	C	From Leg	1.00 0.00 0.00	0.00	117.00	No Ice 1/2" Ice 1" Ice	1.62 1.90 2.18	0.96 1.20 1.47	0.015 0.031 0.049
***									
PV-LPPGS-12M-HR2-AP19	C	None		0.00	90.00	No Ice 1/2" Ice 1" Ice	19.00 25.60 32.20	19.00 25.60 32.20	2.000 2.400 2.800
(3) X7CQAP-86-880-VR0	A	From Leg	4.00 0.00 0.00	0.00	90.00	No Ice 1/2" Ice 1" Ice	13.44 14.04 14.65	9.06 9.66 10.26	0.072 0.153 0.242
(3) X7CQAP-86-880-VR0	B	From Leg	4.00	0.00	90.00	No Ice	13.44	9.06	0.072

Description	Face or Leg	Offset Type	Offsets: Horz Lateral Vert ft ft ft	Azimuth Adjustment °	Placement ft		C_AA_A Front ft^2	C_AA_A Side ft^2	Weight K
			0.00			1/2" Ice	14.04	9.66	0.153
			0.00			1" Ice	14.65	10.26	0.242
(3) X7CQAP-86-880-VR0	C	From Leg	4.00	0.00	90.00	No Ice	13.44	9.06	0.072
			0.00			1/2" Ice	14.04	9.66	0.153
			0.00			1" Ice	14.65	10.26	0.242
(3) RRUS 32	A	From Leg	4.00	0.00	90.00	No Ice	2.86	1.78	0.055
			0.00			1/2" Ice	3.08	1.97	0.077
			0.00			1" Ice	3.32	2.17	0.103
(3) RRUS 32	B	From Leg	4.00	0.00	90.00	No Ice	2.86	1.78	0.055
			0.00			1/2" Ice	3.08	1.97	0.077
			0.00			1" Ice	3.32	2.17	0.103
(3) RRUS 32	C	From Leg	4.00	0.00	90.00	No Ice	2.86	1.78	0.055
			0.00			1/2" Ice	3.08	1.97	0.077
			0.00			1" Ice	3.32	2.17	0.103
DC6-48-60-18-8C	A	From Leg	4.00	0.00	90.00	No Ice	1.14	1.14	0.026
			0.00			1/2" Ice	1.79	1.79	0.047
			0.00			1" Ice	2.00	2.00	0.070
DC6-48-60-18-8C	B	From Leg	4.00	0.00	90.00	No Ice	1.14	1.14	0.026
			0.00			1/2" Ice	1.79	1.79	0.047
			0.00			1" Ice	2.00	2.00	0.070
DC6-48-60-18-8C	C	From Leg	4.00	0.00	90.00	No Ice	1.14	1.14	0.026
			0.00			1/2" Ice	1.79	1.79	0.047
			0.00			1" Ice	2.00	2.00	0.070
***									

Dishes

Description	Face or Leg	Dish Type	Offset Type	Offsets: Horz Lateral Vert ft	Azimuth Adjustment °	3 dB Beam Width °	Elevation ft	Outside Diameter ft		Aperture Area ft^2	Weight K
***											
HPD6-5.2	C	Paraboloid w/Shroud (HP)	From Leg	2.00	14.20		117.00	6.00	No Ice	28.27	0.250
				0.00					1/2" Ice	29.07	0.400
				0.00					1" Ice	29.86	0.550
***											

Load Combinations

Comb. No.	Description
1	Dead Only
2	1.2 Dead+1.0 Wind 0 deg - No Ice
3	0.9 Dead+1.0 Wind 0 deg - No Ice
4	1.2 Dead+1.0 Wind 30 deg - No Ice
5	0.9 Dead+1.0 Wind 30 deg - No Ice
6	1.2 Dead+1.0 Wind 60 deg - No Ice

Comb. No.	Description
7	0.9 Dead+1.0 Wind 60 deg - No Ice
8	1.2 Dead+1.0 Wind 90 deg - No Ice
9	0.9 Dead+1.0 Wind 90 deg - No Ice
10	1.2 Dead+1.0 Wind 120 deg - No Ice
11	0.9 Dead+1.0 Wind 120 deg - No Ice
12	1.2 Dead+1.0 Wind 150 deg - No Ice
13	0.9 Dead+1.0 Wind 150 deg - No Ice
14	1.2 Dead+1.0 Wind 180 deg - No Ice
15	0.9 Dead+1.0 Wind 180 deg - No Ice
16	1.2 Dead+1.0 Wind 210 deg - No Ice
17	0.9 Dead+1.0 Wind 210 deg - No Ice
18	1.2 Dead+1.0 Wind 240 deg - No Ice
19	0.9 Dead+1.0 Wind 240 deg - No Ice
20	1.2 Dead+1.0 Wind 270 deg - No Ice
21	0.9 Dead+1.0 Wind 270 deg - No Ice
22	1.2 Dead+1.0 Wind 300 deg - No Ice
23	0.9 Dead+1.0 Wind 300 deg - No Ice
24	1.2 Dead+1.0 Wind 330 deg - No Ice
25	0.9 Dead+1.0 Wind 330 deg - No Ice
26	1.2 Dead+1.0 Ice+1.0 Temp
27	1.2 Dead+1.0 Wind 0 deg+1.0 Ice+1.0 Temp
28	1.2 Dead+1.0 Wind 30 deg+1.0 Ice+1.0 Temp
29	1.2 Dead+1.0 Wind 60 deg+1.0 Ice+1.0 Temp
30	1.2 Dead+1.0 Wind 90 deg+1.0 Ice+1.0 Temp
31	1.2 Dead+1.0 Wind 120 deg+1.0 Ice+1.0 Temp
32	1.2 Dead+1.0 Wind 150 deg+1.0 Ice+1.0 Temp
33	1.2 Dead+1.0 Wind 180 deg+1.0 Ice+1.0 Temp
34	1.2 Dead+1.0 Wind 210 deg+1.0 Ice+1.0 Temp
35	1.2 Dead+1.0 Wind 240 deg+1.0 Ice+1.0 Temp
36	1.2 Dead+1.0 Wind 270 deg+1.0 Ice+1.0 Temp
37	1.2 Dead+1.0 Wind 300 deg+1.0 Ice+1.0 Temp
38	1.2 Dead+1.0 Wind 330 deg+1.0 Ice+1.0 Temp
39	Dead+Wind 0 deg - Service
40	Dead+Wind 30 deg - Service
41	Dead+Wind 60 deg - Service
42	Dead+Wind 90 deg - Service
43	Dead+Wind 120 deg - Service
44	Dead+Wind 150 deg - Service
45	Dead+Wind 180 deg - Service
46	Dead+Wind 210 deg - Service
47	Dead+Wind 240 deg - Service
48	Dead+Wind 270 deg - Service
49	Dead+Wind 300 deg - Service
50	Dead+Wind 330 deg - Service

Maximum Member Forces

Section No.	Elevation ft	Component Type	Condition	Gov. Load Comb.	Axial K	Major Axis Moment kip-ft	Minor Axis Moment kip-ft
L1	120 - 70.75	Pole	Max Tension	2	0.000	-0.00	-0.00
			Max. Compression	26	-14.652	2.19	-3.23
			Max. Mx	8	-5.974	-317.20	14.30
			Max. My	14	-6.346	22.19	-262.99
			Max. Vy	8	14.501	-317.20	14.30
			Max. Vx	14	12.846	22.19	-262.99
			Max. Torque	21			4.98
L2	70.75 - 31	Pole	Max Tension	1	0.000	0.00	0.00
			Max. Compression	26	-23.703	2.41	-7.64

Section No.	Elevation ft	Component Type	Condition	Gov. Load Comb.	Axial K	Major Axis Moment kip-ft	Minor Axis Moment kip-ft
			Max. Mx	8	-11.257	-1012.46	27.49
			Max. My	14	-11.603	42.62	-849.76
			Max. Vy	8	21.351	-1012.46	27.49
			Max. Vx	14	17.153	42.62	-849.76
			Max. Torque	21			6.90
L3	31 - 0	Pole	Max Tension	1	0.000	0.00	0.00
			Max. Compression	26	-34.310	2.52	-11.54
			Max. Mx	8	-19.110	-1869.11	39.41
			Max. My	14	-19.120	60.80	-1534.35
			Max. Vy	8	25.849	-1869.11	39.41
			Max. Vx	14	20.689	60.80	-1534.35
			Max. Torque	21			7.19

Maximum Reactions

Location	Condition	Gov. Load Comb.	Vertical K	Horizontal, X K	Horizontal, Z K
Pole	Max. Vert	26	34.310	-0.000	0.000
	Max. H_x	21	14.355	25.370	-0.249
	Max. H_z	3	14.355	-0.589	20.626
	Max. M_x	2	1522.74	-0.589	20.626
	Max. M_z	8	1869.11	-25.826	0.350
	Max. Torsion	21	7.18	25.370	-0.249
	Min. Vert	3	14.355	-0.589	20.626
	Min. H_x	8	19.140	-25.826	0.350
	Min. H_z	15	14.355	0.492	-20.671
	Min. M_x	14	-1534.35	0.492	-20.671
	Min. M_z	20	-1816.12	25.370	-0.249
	Min. Torsion	9	-6.82	-25.826	0.350

Tower Mast Reaction Summary

Load Combination	Vertical K	$Shear_x$ K	$Shear_z$ K	Overturning Moment, M_x kip-ft	Overturning Moment, M_z kip-ft	Torque kip-ft
Dead Only	15.950	0.000	-0.001	2.50	0.83	-0.00
1.2 Dead+1.0 Wind 0 deg - No Ice	19.140	0.589	-20.626	-1522.74	-70.52	-2.51
0.9 Dead+1.0 Wind 0 deg - No Ice	14.355	0.589	-20.626	-1511.21	-70.06	-2.51
1.2 Dead+1.0 Wind 30 deg - No Ice	19.140	11.499	-17.939	-1327.26	-905.70	-2.55
0.9 Dead+1.0 Wind 30 deg - No Ice	14.355	11.499	-17.939	-1317.27	-898.32	-2.56
1.2 Dead+1.0 Wind 60 deg - No Ice	19.140	20.034	-11.207	-820.11	-1500.43	1.18
0.9 Dead+1.0 Wind 60 deg - No Ice	14.355	20.034	-11.207	-814.25	-1488.42	1.18
1.2 Dead+1.0 Wind 90 deg - No Ice	19.140	25.826	-0.350	-39.41	-1869.11	6.82
0.9 Dead+1.0 Wind 90 deg - No Ice	14.355	25.826	-0.350	-39.76	-1854.39	6.82

Load Combination	Vertical K	Shear$_x$ K	Shear$_z$ K	Overturning Moment, M_x kip-ft	Overturning Moment, M_z kip-ft	Torque kip-ft
1.2 Dead+1.0 Wind 120 deg - No Ice	19.140	19.973	10.356	723.08	-1493.34	2.49
0.9 Dead+1.0 Wind 120 deg - No Ice	14.355	19.973	10.356	716.68	-1481.39	2.50
1.2 Dead+1.0 Wind 150 deg - No Ice	19.140	10.739	17.589	1291.20	-813.67	1.01
0.9 Dead+1.0 Wind 150 deg - No Ice	14.355	10.739	17.589	1280.03	-807.23	1.02
1.2 Dead+1.0 Wind 180 deg - No Ice	19.140	-0.492	20.671	1534.35	60.80	3.43
0.9 Dead+1.0 Wind 180 deg - No Ice	14.355	-0.492	20.671	1521.13	59.93	3.44
1.2 Dead+1.0 Wind 210 deg - No Ice	19.140	-11.141	17.792	1315.68	864.42	3.93
0.9 Dead+1.0 Wind 210 deg - No Ice	14.355	-11.141	17.792	1304.26	856.94	3.93
1.2 Dead+1.0 Wind 240 deg - No Ice	19.140	-19.593	11.062	808.80	1449.26	-0.26
0.9 Dead+1.0 Wind 240 deg - No Ice	14.355	-19.593	11.062	801.53	1437.24	-0.26
1.2 Dead+1.0 Wind 270 deg - No Ice	19.140	-25.370	0.249	33.26	1816.12	-7.17
0.9 Dead+1.0 Wind 270 deg - No Ice	14.355	-25.370	0.249	32.17	1801.44	-7.18
1.2 Dead+1.0 Wind 300 deg - No Ice	19.140	-19.594	-10.433	-726.37	1449.60	-3.40
0.9 Dead+1.0 Wind 300 deg - No Ice	14.355	-19.594	-10.433	-721.46	1437.56	-3.40
1.2 Dead+1.0 Wind 330 deg - No Ice	19.140	-10.731	-17.652	-1292.72	814.69	-1.77
0.9 Dead+1.0 Wind 330 deg - No Ice	14.355	-10.731	-17.652	-1283.06	807.71	-1.77
1.2 Dead+1.0 Ice+1.0 Temp	34.310	0.000	-0.000	11.54	2.52	-0.00
1.2 Dead+1.0 Wind 0 deg+1.0 Ice+1.0 Temp	34.310	0.032	-1.416	-96.01	-1.56	-0.15
1.2 Dead+1.0 Wind 30 deg+1.0 Ice+1.0 Temp	34.310	0.773	-1.231	-82.12	-59.52	-0.14
1.2 Dead+1.0 Wind 60 deg+1.0 Ice+1.0 Temp	34.310	1.286	-0.723	-44.09	-98.25	0.06
1.2 Dead+1.0 Wind 90 deg+1.0 Ice+1.0 Temp	34.310	1.611	-0.019	9.17	-119.68	0.38
1.2 Dead+1.0 Wind 120 deg+1.0 Ice+1.0 Temp	34.310	1.283	0.676	61.38	-97.86	0.15
1.2 Dead+1.0 Wind 150 deg+1.0 Ice+1.0 Temp	34.310	0.732	1.211	102.91	-54.25	0.07
1.2 Dead+1.0 Wind 180 deg+1.0 Ice+1.0 Temp	34.310	-0.027	1.419	119.56	5.96	0.20
1.2 Dead+1.0 Wind 210 deg+1.0 Ice+1.0 Temp	34.310	-0.754	1.223	104.33	62.13	0.22
1.2 Dead+1.0 Wind 240 deg+1.0 Ice+1.0 Temp	34.310	-1.262	0.715	66.30	100.29	-0.01
1.2 Dead+1.0 Wind 270 deg+1.0 Ice+1.0 Temp	34.310	-1.586	0.014	13.34	121.57	-0.40
1.2 Dead+1.0 Wind 300 deg+1.0 Ice+1.0 Temp	34.310	-1.262	-0.680	-38.70	100.25	-0.20
1.2 Dead+1.0 Wind 330 deg+1.0 Ice+1.0 Temp	34.310	-0.731	-1.215	-80.12	59.24	-0.12
Dead+Wind 0 deg - Service	15.950	0.109	-3.817	-278.82	-12.29	-0.47
Dead+Wind 30 deg - Service	15.950	2.128	-3.320	-242.80	-166.31	-0.48
Dead+Wind 60 deg - Service	15.950	3.707	-2.074	-149.27	-276.07	0.22
Dead+Wind 90 deg - Service	15.950	4.778	-0.065	-5.24	-344.16	1.28

Load Combination	Vertical K	Shear$_x$ K	Shear$_z$ K	Overturning Moment, M_x kip-ft	Overturning Moment, M_z kip-ft	Torque kip-ft
Dead+Wind 120 deg - Service	15.950	3.696	1.917	135.41	-274.72	0.47
Dead+Wind 150 deg - Service	15.950	1.987	3.255	240.12	-149.34	0.19
Dead+Wind 180 deg - Service	15.950	-0.091	3.825	284.95	11.87	0.64
Dead+Wind 210 deg - Service	15.950	-2.062	3.293	244.65	160.06	0.74
Dead+Wind 240 deg - Service	15.950	-3.626	2.047	151.18	267.97	-0.05
Dead+Wind 270 deg - Service	15.950	-4.694	0.046	8.14	335.70	-1.35
Dead+Wind 300 deg - Service	15.950	-3.626	-1.931	-131.98	268.00	-0.64
Dead+Wind 330 deg - Service	15.950	-1.986	-3.267	-236.38	150.89	-0.33

Solution Summary

	Sum of Applied Forces			Sum of Reactions			
Load Comb.	PX K	PY K	PZ K	PX K	PY K	PZ K	% Error
1	0.000	-15.950	0.000	-0.000	15.950	0.001	0.004%
2	0.589	-19.140	-20.628	-0.589	19.140	20.626	0.006%
3	0.589	-14.355	-20.628	-0.589	14.355	20.626	0.005%
4	11.499	-19.140	-17.939	-11.499	19.140	17.939	0.000%
5	11.499	-14.355	-17.939	-11.499	14.355	17.939	0.000%
6	20.034	-19.140	-11.207	-20.034	19.140	11.207	0.000%
7	20.034	-14.355	-11.207	-20.034	14.355	11.207	0.000%
8	25.827	-19.140	-0.350	-25.826	19.140	0.350	0.001%
9	25.827	-14.355	-0.350	-25.826	14.355	0.350	0.002%
10	19.973	-19.140	10.356	-19.973	19.140	-10.356	0.000%
11	19.973	-14.355	10.356	-19.973	14.355	-10.356	0.000%
12	10.739	-19.140	17.589	-10.739	19.140	-17.589	0.000%
13	10.739	-14.355	17.589	-10.739	14.355	-17.589	0.000%
14	-0.492	-19.140	20.671	0.492	19.140	-20.671	0.001%
15	-0.492	-14.355	20.671	0.492	14.355	-20.671	0.001%
16	-11.141	-19.140	17.792	11.141	19.140	-17.792	0.000%
17	-11.141	-14.355	17.792	11.141	14.355	-17.792	0.000%
18	-19.593	-19.140	11.062	19.593	19.140	-11.062	0.000%
19	-19.593	-14.355	11.062	19.593	14.355	-11.062	0.000%
20	-25.370	-19.140	0.249	25.370	19.140	-0.249	0.001%
21	-25.370	-14.355	0.249	25.370	14.355	-0.249	0.001%
22	-19.594	-19.140	-10.433	19.594	19.140	10.433	0.000%
23	-19.594	-14.355	-10.433	19.594	14.355	10.433	0.000%
24	-10.731	-19.140	-17.652	10.731	19.140	17.652	0.000%
25	-10.731	-14.355	-17.652	10.731	14.355	17.652	0.000%
26	0.000	-34.310	0.000	-0.000	34.310	0.000	0.001%
27	0.032	-34.310	-1.417	-0.032	34.310	1.416	0.002%
28	0.773	-34.310	-1.231	-0.773	34.310	1.231	0.002%
29	1.287	-34.310	-0.723	-1.286	34.310	0.723	0.002%
30	1.611	-34.310	-0.019	-1.611	34.310	0.019	0.001%
31	1.283	-34.310	0.676	-1.283	34.310	-0.676	0.001%
32	0.732	-34.310	1.212	-0.732	34.310	-1.211	0.001%
33	-0.027	-34.310	1.419	0.027	34.310	-1.419	0.001%
34	-0.754	-34.310	1.223	0.754	34.310	-1.223	0.001%
35	-1.263	-34.310	0.715	1.262	34.310	-0.715	0.001%
36	-1.586	-34.310	0.014	1.586	34.310	-0.014	0.001%
37	-1.263	-34.310	-0.681	1.262	34.310	0.680	0.002%
38	-0.731	-34.310	-1.215	0.731	34.310	1.215	0.002%
39	0.109	-15.950	-3.818	-0.109	15.950	3.817	0.004%
40	2.128	-15.950	-3.320	-2.128	15.950	3.320	0.004%
41	3.708	-15.950	-2.074	-3.707	15.950	2.074	0.004%
42	4.779	-15.950	-0.065	-4.778	15.950	0.065	0.005%
43	3.696	-15.950	1.917	-3.696	15.950	-1.917	0.004%
44	1.988	-15.950	3.256	-1.987	15.950	-3.255	0.004%

	Sum of Applied Forces			Sum of Reactions			
Load Comb.	PX K	PY K	PZ K	PX K	PY K	PZ K	% Error
45	-0.091	-15.950	3.826	0.091	15.950	-3.825	0.004%
46	-2.062	-15.950	3.293	2.062	15.950	-3.293	0.004%
47	-3.626	-15.950	2.047	3.626	15.950	-2.047	0.004%
48	-4.695	-15.950	0.046	4.694	15.950	-0.046	0.005%
49	-3.626	-15.950	-1.931	3.626	15.950	1.931	0.004%
50	-1.986	-15.950	-3.267	1.986	15.950	3.267	0.004%

Non-Linear Convergence Results

Load Combination	Converged?	Number of Cycles	Displacement Tolerance	Force Tolerance
1	Yes	6	0.00000001	0.00001757
2	Yes	14	0.00007247	0.00010640
3	Yes	14	0.00004989	0.00008378
4	Yes	17	0.00000001	0.00013404
5	Yes	17	0.00000001	0.00009615
6	Yes	17	0.00000001	0.00013462
7	Yes	17	0.00000001	0.00009586
8	Yes	16	0.00000001	0.00006969
9	Yes	15	0.00000001	0.00011725
10	Yes	17	0.00000001	0.00013183
11	Yes	17	0.00000001	0.00009478
12	Yes	17	0.00000001	0.00010999
13	Yes	17	0.00000001	0.00007937
14	Yes	16	0.00000001	0.00008893
15	Yes	16	0.00000001	0.00006659
16	Yes	17	0.00000001	0.00014056
17	Yes	17	0.00000001	0.00010140
18	Yes	17	0.00000001	0.00013004
19	Yes	17	0.00000001	0.00009278
20	Yes	16	0.00000001	0.00011559
21	Yes	16	0.00000001	0.00008474
22	Yes	17	0.00000001	0.00009761
23	Yes	17	0.00000001	0.00006988
24	Yes	17	0.00000001	0.00012121
25	Yes	17	0.00000001	0.00008789
26	Yes	11	0.00000001	0.00001228
27	Yes	13	0.00000001	0.00003510
28	Yes	13	0.00000001	0.00003832
29	Yes	13	0.00000001	0.00004063
30	Yes	14	0.00000001	0.00002466
31	Yes	14	0.00000001	0.00002499
32	Yes	14	0.00000001	0.00002505
33	Yes	14	0.00000001	0.00002570
34	Yes	14	0.00000001	0.00002739
35	Yes	14	0.00000001	0.00002711
36	Yes	14	0.00000001	0.00002625
37	Yes	13	0.00000001	0.00004195
38	Yes	13	0.00000001	0.00003847
39	Yes	13	0.00000001	0.00006888
40	Yes	13	0.00000001	0.00005465
41	Yes	13	0.00000001	0.00005879
42	Yes	13	0.00000001	0.00009561
43	Yes	13	0.00000001	0.00007274
44	Yes	13	0.00000001	0.00005356
45	Yes	13	0.00000001	0.00007609

46	Yes	13	0.00000001	0.00006968
47	Yes	13	0.00000001	0.00006036
48	Yes	13	0.00000001	0.00009787
49	Yes	13	0.00000001	0.00005979
50	Yes	13	0.00000001	0.00005995

Maximum Tower Deflections - Service Wind

Section No.	Elevation ft	Horz. Deflection in	Gov. Load Comb.	Tilt °	Twist °
L1	120 - 70.75	20.19	42	1.30	0.02
L2	75 - 31	8.62	42	1.06	0.01
L3	36 - 0	2.01	42	0.50	0.00

Critical Deflections and Radius of Curvature - Service Wind

Elevation ft	Appurtenance	Gov. Load Comb.	Deflection in	Tilt °	Twist °	Radius of Curvature ft
120.00	1/2-in x 4-ft Lightning Rod	42	20.19	1.30	0.02	48704
117.00	HPD6-5.2	42	19.37	1.29	0.02	48704
90.00	PV-LPPGS-12M-HR2-AP19	42	12.20	1.18	0.01	8116

Maximum Tower Deflections - Design Wind

Section No.	Elevation ft	Horz. Deflection in	Gov. Load Comb.	Tilt °	Twist °
L1	120 - 70.75	109.94	8	7.12	0.11
L2	75 - 31	46.83	8	5.76	0.05
L3	36 - 0	10.92	8	2.72	0.02

Critical Deflections and Radius of Curvature - Design Wind

Elevation ft	Appurtenance	Gov. Load Comb.	Deflection in	Tilt °	Twist °	Radius of Curvature ft
120.00	1/2-in x 4-ft Lightning Rod	8	109.94	7.12	0.11	9053
117.00	HPD6-5.2	8	105.46	7.07	0.11	9053
90.00	PV-LPPGS-12M-HR2-AP19	8	66.34	6.44	0.07	1504

Compression Checks

Pole Design Data

Section No.	Elevation ft	Size	L ft	L_u ft	Kl/r	A in^2	P_u K	ϕP_n K	Ratio $\frac{P_u}{\phi P_n}$
L1	120 - 70.75 (1)	TP24.87x17x0.22	49.25	0.00	0.0	16.90	-5.974	988.912	0.006
L2	70.75 - 31 (2)	TP30.78x23.75x0.28	44.00	0.00	0.0	26.87	-11.257	1572.100	0.007
L3	31 - 0 (3)	TP35.17x29.42x0.38	36.00	0.00	0.0	42.01	-19.110	2457.880	0.008

Pole Bending Design Data

Section No.	Elevation ft	Size	M_{ux} kip-ft	ϕM_{nx} kip-ft	Ratio $\frac{M_{ux}}{\phi M_{nx}}$	M_{uy} kip-ft	ϕM_{ny} kip-ft	Ratio $\frac{M_{uy}}{\phi M_{ny}}$
L1	120 - 70.75 (1)	TP24.87x17x0.22	317.52	548.34	0.579	0.00	548.34	0.000
L2	70.75 - 31 (2)	TP30.78x23.75x0.28	1012.83	1095.77	0.924	0.00	1095.77	0.000
L3	31 - 0 (3)	TP35.17x29.42x0.38	1869.53	2105.26	0.888	0.00	2105.26	0.000

Pole Shear Design Data

Section No.	Elevation ft	Size	Actual V_u K	ϕV_n K	Ratio $\frac{V_u}{\phi V_n}$	Actual T_u kip-ft	ϕT_n kip-ft	Ratio $\frac{T_u}{\phi T_n}$
L1	120 - 70.75 (1)	TP24.87x17x0.22	14.505	296.674	0.049	4.62	625.58	0.007
L2	70.75 - 31 (2)	TP30.78x23.75x0.28	21.354	471.631	0.045	6.54	1232.16	0.005
L3	31 - 0 (3)	TP35.17x29.42x0.38	25.851	737.363	0.035	6.82	2256.82	0.003

Pole Interaction Design Data

Section No.	Elevation ft	Ratio $\frac{P_u}{\phi P_n}$	Ratio $\frac{M_{ux}}{\phi M_{nx}}$	Ratio $\frac{M_{uy}}{\phi M_{ny}}$	Ratio $\frac{V_u}{\phi V_n}$	Ratio $\frac{T_u}{\phi T_n}$	Comb. Stress Ratio	Allow. Stress Ratio	Criteria
L1	120 - 70.75 (1)	0.006	0.579	0.000	0.049	0.007	0.588	1.000	
L2	70.75 - 31 (2)	0.007	0.924	0.000	0.045	0.005	0.934	1.000	
L3	31 - 0 (3)	0.008	0.888	0.000	0.035	0.003	0.897	1.000	

Section Capacity Table

Section No.	Elevation ft	Component Type	Size	Critical Element	P K	ϕP_{allow} K	% Capacity	Pass Fail
L1	120 - 70.75	Pole	TP24.87x17x0.22	1	-5.974	988.912	58.8	Pass
L2	70.75 - 31	Pole	TP30.78x23.75x0.28	2	-11.257	1572.100	93.4	Pass
L3	31 - 0	Pole	TP35.17x29.42x0.38	3	-19.110	2457.880	89.7	Pass
							Summary	
						Pole (L2)	93.4	Pass
						RATING =	**93.4**	**Pass**

Program Version 8.3.1.2 - 12/11/2024 File:C:/Users/hicham.anssar/OneDrive - Engineered Tower Solutions/Desktop/131424_Sumter Alice Drive 230 Sub/SE/5933_Tower Analysis/Analysis/Tower/Sumter Alice Drive 230 Sub.eri

APPENDIX B

POLE DESIGN SPECIFICATIONS

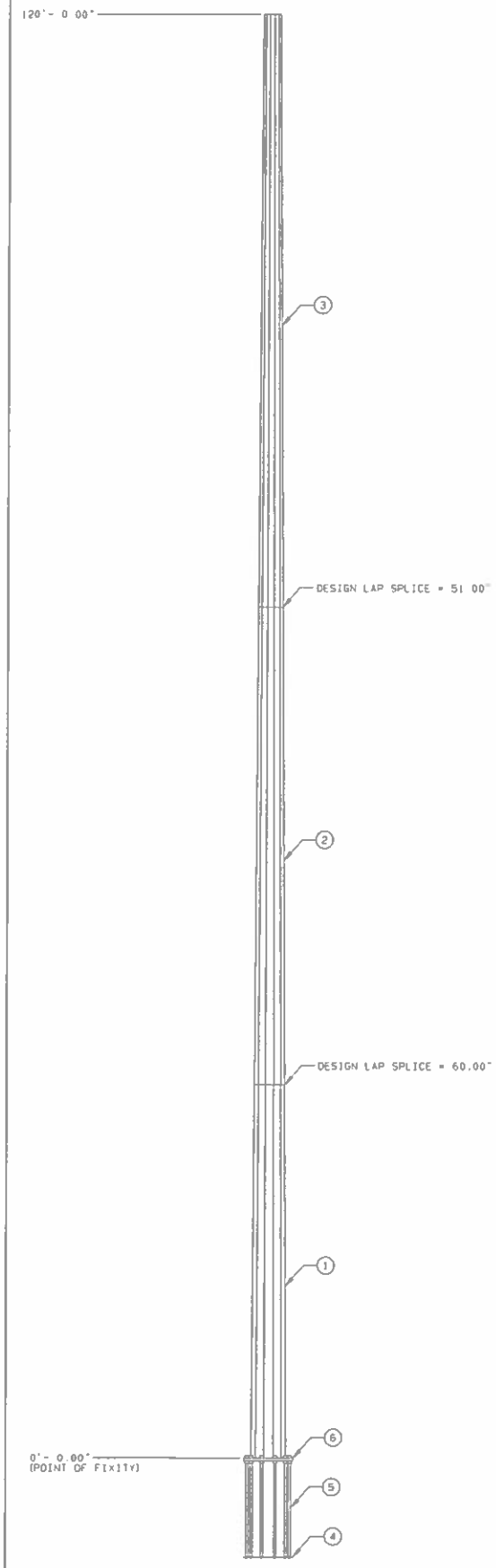

ITEM ID	NO. REQD	FEATURES	UNIT WEIGHT (LBS)	WEIGHT (LBS)
1	1	SECTION A VALMONT S-22 0.375" THK (A572 GR65)	4,674	4,674
2	1	SECTION B VALMONT S-22 0.281" THK (A572 GR65)	3,620	3,620
3	1	SECTION C VALMONT S-22 0.219" THK (A572 GR65)	2,415	2,415
	1	ANCHORAGE (SHIPPED ASSEMBLED)	1,419	1,419
4	1	BOTTOM CAGE PLATE		
	1	TOP CAGE PLATE (REMOVE BEFORE SETTING POLE)		
5	10	2.25" ANCHOR BOLT, LENGTH=8.50' A615 GR75		
6	1	BASE PLATE VALMONT S-56 2.750" THK (A572 GR50)	1,062	1,062
	1	SAFETY CLIMBING CABLE (LENGTH = 110.00')	89	89
	3	GROUNDING LUG	2	6
		GALVANIZING	259	259
	109	STEP AND CLIP (VALMONT STANDARD)	1	109
	1	POLE CAP	16	16

HOLE COORDS (INCHES)	
X-COORD	Y-COORD
21.50	0.00
17.39	12.64
6.64	20.45

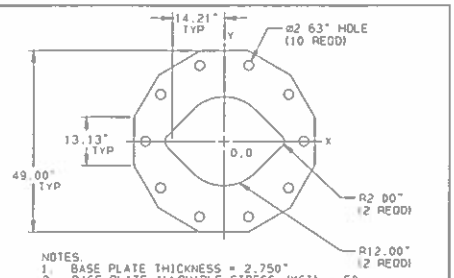

NOTES:
1. BASE PLATE THICKNESS = 2.750"
2. BASE PLATE ALLOWABLE STRESS (KSI) = 50
3. VENT AND DRAIN HOLES PROVIDED
4. MAXIMUM BOLT CIRCLE DIAMETER = 43.00"
5. MAXIMUM CAGE TEMPLATE DIAMETER = 49.00"

BASE PLATE / ANCHORAGE CHARACTERISTICS

NOTES:

1. POLE SHAFT-GOVERNING REACTIONS.
   MOMENT = 18,192 IN-KIPS
   SHEAR = 20,343 #
   VERTICAL = 15,402 #
2. GALVANIZED PER ASTM A-123.
3. DESIGN CRITERIA: ANSI/TIA 222-H
4. THIS STRUCTURE HAS BEEN DESIGNED FOR THE FOLLOWING LOADING:
   EXPOSURE CATEGORY = C
   TOPOGRAPHY CATEGORY = 1
   RISK CATEGORY = 3
   SITE ELEVATION = 18 FT
   EARTHQUAKE SPECTRAL RESPONSE ACCELERATION AT SHORT PERIODS Ss = 0.15
   EARTHQUAKE SPECTRAL RESPONSE ACCELERATION AT ONE SECOND S1 = 0.07
   EARTHQUAKE SITE CLASS = D
   WIND LOAD CASES ARE BASED ON 3 SECOND GUST AND 1700 YEAR MRI
   A. EQUIPMENT

DESCRIPTION	ABP WTG HT. (FT)	ABP CENTROID HT. (FT)	WITHOUT ICE EPA (FT**2)	WITHOUT ICE WT (LBS)	WITH ICE EPA (FT**2)	WITH ICE WT (LBS)
4-CAMBIUM PMP450M (27.2" X 24	118.50	118.50	11.36	200	12.24	384
4-24" STANDOFF	118.50	118.50	4.56	116	5.96	208
2-PTP 670	113.50	113.50	0.76	18	0.98	42
2-4' HIGH PERFORMANCE	113.50	113.50	36.90	564	39.58	770
4-CAMBIUM PMP450M (27.2" X 24	108.50	108.50	11.36	200	12.24	380
4-24" STANDOFF	108.50	108.50	4.56	116	5.96	204
1-WHIP (2" X 6')	80.00	83.00	1.20	10	1.85	23
1-36" STANDOFF	80.00	80.00	4.46	55	5.81	98

5. FEEDLINES ARE PLACED INTERIOR TO POLE SHAFT (UNLESS NOTED OTHERWISE)
6. TOTAL POLE HEIGHT IS 121 FT AGL.
7. ELEVATIONS ARE MEASURED FROM TOP OF BASE PLATE (APPROX. 1 FT AGL).

SECTION INFORMATION

ITEM ID	LENGTH	BASE OD	TOP OD	THK	MATL
1	36'- 0.00"	35.17"	29.42"	0.375"	A572 65 KSI
2	44'- 0.00"	30.78"	23.75"	0.281"	A572 65 KSI
3	49'- 3.00"	24.87"	17.00"	0.219"	A572 65 KSI

ORDER	PROJECT	FILE ID	SCALE	DATE	ENGR
	508946	TELE_H10_120ft	NONE	05/25/21	CA70

DESCRIPTION
DUKE, 120.0' AGH, TELE_H10_120FT TIA, 508946

valmont

APPENDIX C

FOUNDATION DESIGN DRAWINGS

FOUNDATION DESIGN DRAWINGS

SITE INFORMATION

SITE NAME	SUMTER ALICE DRIVE 230 SUB
SITE NUMBER	
SITE ADDRESS	1242 ALICE DRIVE SUMTER SC 29150 SUMTER COUNTY
LAT. / LONG.	33.9528533° N 80.3906981° W
ETS JOB#	24131424.STR.3851
TOWER MANUFACTURER	VALMONT
TOWER TYPE	PROPOSED MONOPOLE TOWER
TOWER HEIGHT	120-FT

LOCATION MAP

DRIVING DIRECTIONS

FROM SUMTER, HEAD WEST ON SC-763 S/E LIBERTY ST TOWARD N MAIN ST (1.9 MI)
TURN RIGHT ONTO ALICE DR (2.3 MI)
TURN LEFT AFTER WATER SPORTS AND SPAS

PROJECT CONTACTS

1. CLIENT REPRESENTATIVE

   ROBERT JACKSON
   SENIOR TELECOM ANALYST

   DUKE ENERGY
   (910) 523-8706

   ROBERT.JACKSON3@DUKE-ENERGY.COM

2. CONSTRUCTION MANAGER

   (TBD)

3. ENGINEER OF RECORD (EOR)

   CHRISTOPHER G. PLY, P.E., S.E.

   3227 WELLINGTON CT.
   RALEIGH, NC 27615
   OFFICE: (919) 782-2710

   CHRIS.PLY@ETS-PLLC.COM

CODE COMPLIANCE

THIS FOUNDATION DESIGN IS BASED ON THE REQUIREMENTS OF TIA STRUCTURAL STANDARDS FOR STEEL ANTENNA TOWERS AND ANTENNA SUPPORTING STRUCTURES USING

TIA CODE	TIA-222-H
BUILDING CODE	2021 INTERNATIONAL BUILDING CODE
ULTIMATE WIND SPEED	132 MPH
ICE THICKNESS	1.00 IN
WIND SPEED WITH ICE	30 MPH
SERVICE LOAD WIND SPEED	60 MPH
EXPOSURE CATEGORY	C
RISK CATEGORY	II
TOPOGRAPHIC CATEGORY	1
S_S	0.206
S_1	0.069

SHEET INDEX

SHEET #	REV. (DATE)	DESCRIPTION
T-1	0 - 07/02/2025	TITLE PAGE
N-1	0 - 07/02/2025	PROJECT NOTES
S-1	0 - 07/02/2025	DRILLED SHAFT FOUNDATION DETAILS
-	-	-
-	-	-
-	-	-
-	-	-
-	-	-
-	-	-
-	-	-
-	-	-
-	-	-
-	-	-
-	-	-
-	-	-
-	-	-
-	-	-
-	-	-
-	-	-

PREPARED BY:

ENGINEERED TOWER SOLUTIONS

3227 WELLINGTON COURT
RALEIGH, NC 27615
o: 919-782-2710, f: 919-435-0831
www.ets-pllc.com

PREPARED FOR:

DUKE ENERGY.

SITE NAME:
SUMTER ALICE DRIVE 230 SUB
SITE NUMBER:

DESCRIPTION:
FOUNDATION DESIGN DRAWINGS

SITE ADDRESS:
1242 ALICE DRIVE
SUMTER, SC 29150
SUMTER COUNTY

LATITUDE/LONGITUDE:
33.9528533° N, 80.3906981° W

SEAL:

SOUTH CAROLINA REGISTERED PROFESSIONAL ENGINEER No. 22960 CHRISTOPHER G. PLY 07/02/2025

SOUTH CAROLINA ENGINEERED TOWER SOLUTIONS, PLLC NO. 4634 CERTIFICATE OF AUTHORIZATION

REV	DATE	DETAILS
0	07/02/2025	FOR CONSTRUCTION
1		
2		

DRAWN BY: OJN | CHECKED BY: JSH

SHEET TITLE:
TITLE PAGE

SHEET # T-1 | CURRENT REV # 0 | ETS #: 24131424.STR.3851

GENERAL NOTES:

1. ALL REFERENCES TO THE OWNER IN THESE DOCUMENTS SHALL BE CONSIDERED DUKE ENERGY OR ITS DESIGNATED REPRESENTATIVE.
2. ALL WORK PRESENTED ON THESE DRAWINGS MUST BE COMPLETED BY THE CONTRACTOR UNLESS NOTED OTHERWISE. THE CONTRACTOR MUST HAVE CONSIDERABLE EXPERIENCE IN PERFORMANCE OF WORK SIMILAR TO THAT DESCRIBED HEREIN, BY ACCEPTANCE OF THIS ASSIGNMENT. THE CONTRACTOR IS ATTESTING THAT HE DOES HAVE SUFFICIENT EXPERIENCE AND ABILITY. THAT HE IS KNOWLEDGEABLE OF THE WORK TO BE PERFORMED AND THAT HE IS PROPERLY LICENSED AND PROPERLY REGISTERED TO DO THIS WORK IN THE STATE OF SOUTH CAROLINA.
3. WORK SHALL BE COMPLETED IN ACCORDANCE WITH THE 2021 INTERNATIONAL BUILDING CODE.
4. UNLESS SHOWN OR NOTED OTHERWISE ON THE CONTRACT DRAWINGS, OR IN THE SPECIFICATIONS, THE FOLLOWING NOTES SHALL APPLY TO THE MATERIALS LISTED HEREIN, AND TO THE PROCEDURES TO BE USED ON THIS PROJECT.
5. ALL HARDWARE ASSEMBLY MANUFACTURER'S INSTRUCTIONS SHALL BE FOLLOWED EXACTLY AND SHALL SUPERSEDE ANY CONFLICTING NOTES ENCLOSED HEREIN.
6. IT IS THE CONTRACTOR'S SOLE RESPONSIBILITY TO DETERMINE ERECTION PROCEDURE AND SEQUENCE TO INSURE THE SAFETY OF THE STRUCTURE AND IT'S COMPONENT PARTS DURING ERECTION AND/OR FIELD MODIFICATIONS. THIS INCLUDES, BUT IS NOT LIMITED TO, THE ADDITION OF TEMPORARY BRACING, GUYS OR TIE DOWNS THAT MAY BE NECESSARY. SUCH MATERIAL SHALL BE REMOVED AND SHALL REMAIN THE PROPERTY OF THE CONTRACTOR AFTER THE COMPLETION OF THE PROJECT.
7. ALL DIMENSIONS, ELEVATIONS, AND EXISTING CONDITIONS SHOWN ON THE DRAWINGS SHALL BE FIELD VERIFIED BY THE CONTRACTOR PRIOR TO BEGINNING ANY MATERIALS ORDERING, FABRICATION OR CONSTRUCTION WORK ON THIS PROJECT. CONTRACTOR SHALL NOT SCALE CONTRACT DRAWINGS IN LIEU OF FIELD VERIFICATIONS. ANY DISCREPANCIES SHALL BE IMMEDIATELY BROUGHT TO THE ATTENTION OF THE OWNER AND THE OWNER'S ENGINEER. THE DISCREPANCIES MUST BE RESOLVED BEFORE THE CONTRACTOR IS TO PROCEED WITH THE WORK. THE CONTRACT DOCUMENTS DO NOT INDICATE THE METHOD OF CONSTRUCTION. THE CONTRACTOR SHALL SUPERVISE AND DIRECT THE WORK AND SHALL BE SOLELY RESPONSIBLE FOR ALL CONSTRUCTION MEANS, METHODS, TECHNIQUES, SEQUENCES, AND PROCEDURES. OBSERVATION VISITS TO THE SITE BY THE OWNER AND/OR THE ENGINEER SHALL NOT INCLUDE INSPECTION OF THE PROTECTIVE MEASURES OR THE PROCEDURES.
8. ALL MATERIALS AND EQUIPMENT FURNISHED SHALL BE NEW AND OF GOOD QUALITY, FREE FROM FAULTS AND DEFECTS AND IN CONFORMANCE WITH THE CONTRACT DOCUMENTS. ANY AND ALL SUBSTITUTIONS MUST BE PROPERLY APPROVED AND AUTHORIZED IN WRITING BY THE OWNER AND ENGINEER PRIOR TO INSTALLATION. THE CONTRACTOR SHALL FURNISH SATISFACTORY EVIDENCE AS TO THE KIND AND QUALITY OF THE MATERIALS AND EQUIPMENT BEING SUBSTITUTED.
9. THE CONTRACTOR SHALL BE RESPONSIBLE FOR INITIATING, MAINTAINING, AND SUPERVISING ALL SAFETY PRECAUTIONS AND PROGRAMS IN CONNECTION WITH THE WORK. THE CONTRACTOR IS RESPONSIBLE FOR ENSURING THAT THIS PROJECT AND RELATED WORK COMPLIES WITH ALL APPLICABLE LOCAL, STATE, AND FEDERAL SAFETY CODES AND REGULATIONS GOVERNING THIS WORK.
10. ACCESS TO THE PROPOSED WORK SITE MAY BE RESTRICTED. THE CONTRACTOR SHALL COORDINATE INTENDED CONSTRUCTION ACTIVITY, INCLUDING WORK SCHEDULE AND MATERIALS ACCESS, WITH THE RESIDENT LEASING AGENT FOR APPROVAL.
11. ALL PERMITS THAT MUST BE OBTAINED ARE THE RESPONSIBILITY OF THE CONTRACTOR. THE CONTRACTOR WILL BE RESPONSIBLE FOR ABIDING BY ALL CONDITIONS AND REQUIREMENTS OF THE PERMITS.
12. IF APPLICABLE, ALL CONCRETE WORK SHALL COMPLY TO LOCAL CODES AND THE ACI 318-14, "BUILDING REQUIREMENTS FOR STRUCTURAL CONCRETE".
13. 24 HOURS PRIOR TO THE BEGINNING OF ANY CONSTRUCTION, THE CONTRACTOR MUST NOTIFY THE APPLICABLE JURISDICTIONAL (STATE, COUNTY OR CITY) ENGINEER.

DESIGN TOWER BASE REACTIONS:

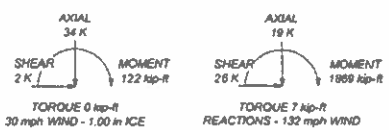

SITE SPECIFIC SOIL PARAMETERS:

1. THIS FOUNDATION DESIGN IS BASED ON THE GEOTECHNICAL REPORT BY ETS, PLLC JOB. NO. 24131424, DATE 06/13/2025
2. THE FOLLOWING SOIL PARAMETERS WERE USED IN THE DESIGN OF DRILLED PIER FOUNDATIONS:

SOIL TYPE	TOP (ft.)	BOTTOM (ft.)	N (blows/ft.) [blow/m]	ϕ (deg.)	γ (lb/ft³)	c (psf)	NOMINAL ULTIMATE NET BEARING STRENGTH (psf) DEEP FOUNDATIONS	S_u (psf)	k (pci)	ε50
COHESIONLESS	0.0	3.0	-	0	105	0	N/A	0	N/A	N/A
COHESIONLESS	3.0	4.0	-	27	105	0	N/A	200	N/A	N/A
COHESIONLESS	4.0	4.3	-	29	105	0	N/A	200	N/A	N/A
COHESIONLESS	4.3	6.0	-	29	42.6	0	N/A	200	N/A	N/A
COHESIONLESS	6.0	8.0	-	30	52.6	0	N/A	300	N/A	N/A
COHESIONLESS	8.0	12.0	-	30	52.6	0	N/A	500	N/A	N/A
COHESIONLESS	12.0	17.0	-	27	42.6	0	N/A	600	N/A	N/A
COHESIVE	17.0	22.0	-	0	37.6	200	N/A	100	N/A	N/A
COHESIONLESS	22.0	24.0	-	32	62.6	0	27000	1100	N/A	N/A

FOUNDATION NOTES:

FOUNDATION GENERAL NOTES

1. FOUNDATION INSTALLATION SHALL BE SUPERVISED BY PERSONNEL KNOWLEDGEABLE AND EXPERIENCED WITH THE PROPOSED FOUNDATION TYPE. CONSTRUCTION SHALL BE IN ACCORDANCE WITH GENERALLY ACCEPTED PRACTICES AND IN A GOOD WORKMANLIKE MANNER.
2. CONTRACTOR TO VERIFY DIMENSIONS WITH ORIGINAL TOWER DRAWINGS. ETS SHALL BE NOTIFIED OF ANY DISCREPANCIES BETWEEN FIELD MEASURED DIMENSIONS AND ORIGINAL TOWER DRAWINGS.
3. FOUNDATION DESIGN MODIFICATIONS MAY BE REQUIRED IN THE EVENT THE DESIGN PARAMETERS ARE NOT APPLICABLE FOR THE SUBSURFACE CONDITIONS ENCOUNTERED DURING CONSTRUCTION.
4. THE FOUNDATION DESIGN IS IN ACCORDANCE WITH GENERALLY ACCEPTED PROFESSIONAL ENGINEERING PRINCIPLES AND PRACTICES WITHIN THE LIMITS OF SUBSURFACE DATA PROVIDED.
5. THE FOUNDATION DEPTH INDICATED IS BASED ON THE GRADE LINE DESCRIBED IN THE REFERENCE GEOTECHNICAL REPORT. FOUNDATION MODIFICATION MAY BE REQUIRED IN THE EVENT CUT OR FILL OPERATIONS HAVE TAKEN PLACE SUBSEQUENT TO THE GEOTECHNICAL INVESTIGATION.
6. THE FOUNDATION DESIGN ASSUMES THAT INSTALLATION METHODS WILL INCORPORATE THE PROCEDURES RECOMMENDED IN THIS REPORT.
7. THE FOUNDATION DESIGN ASSUMES FIELD INSPECTIONS WILL BE PERFORMED TO VERIFY THAT CONSTRUCTION MATERIALS, INSTALLATION METHODS, AND ASSUMED DESIGN PARAMETERS ARE ACCEPTABLE BASED ON THE CONDITIONS AT THE SITE.
8. THE FOUNDATION DESIGN ASSUMES NO CONSTRUCTION JOINTS, HOWEVER, CONSTRUCTION JOINTS SHALL BE PERMITTED UPON APPROVAL BY THE OWNER/ENGINEER.

EXCAVATION:

1. WORK SHALL BE IN ACCORDANCE WITH LOCAL CODES AND SAFETY REGULATIONS. PROCEDURES FOR THE PROTECTION OF EXCAVATIONS, EXISTING CONSTRUCTION, AND UTILITIES SHALL BE ESTABLISHED PRIOR TO BEGINNING WORK.
2. THE SIDES OF THE EXCAVATION SHALL BE ROUGH AND FREE OF CUTTINGS.
3. LOOSE MATERIAL TO BE REMOVED FROM THE BOTTOM OF EXCAVATION PRIOR TO CONCRETE PLACEMENT.

REINFORCING STEEL:

1. THE REINFORCING STEEL SHALL CONFORM TO THE REQUIREMENTS OF ASTM A-615, GRADE 60. IT SHALL BE DEFORMED AND SPLICES SHALL NOT BE ALLOWED UNLESS OTHERWISE NOTED.
2. WELDING IS PROHIBITED ON REINFORCING STEEL AND EMBEDMENTS.
3. REINFORCING CAGES SHALL BE BRACED TO RETAIN PROPER DIMENSIONS DURING HANDLING AND THROUGHOUT PLACEMENT OF CONCRETE. WHEN TEMPORARY CASING IS UTILIZED, BRACING SHALL BE ADEQUATE TO RESIST FORCES OCCURRING FROM FLOWING CONCRETE DURING CASING EXCAVATION.
4. SPACERS SHALL BE ATTACHED INTERMITTENTLY THROUGHOUT THE ENTIRE LENGTH OF TIEBACK REINFORCING TO INSURE CONCENTRIC PLACEMENT OF CASING IN EXCAVATIONS.
5. MINIMUM CONCRETE COVER FOR REINFORCEMENT SHALL BE 3" UNLESS OTHERWISE NOTED. APPROVED SPACERS SHALL BE USED TO INSURE A 3" MINIMUM COVER FOR REINFORCEMENT.
6. THE CONCRETE COVER FROM THE TOP OF THE FOUNDATION TO THE ENDS OF THE VERTICAL REINFORCEMENT SHALL NOT BE LESS THAN 3".

CONCRETE:

1. WORK SHALL BE IN ACCORDANCE WITH THE ACI 318-14, "BUILDING CODE REQUIREMENTS FOR STRUCTURAL CONCRETE AND COMMENTARY".
2. THE CONCRETE SHALL DEVELOP A MINIMUM COMPRESSIVE STRENGTH OF 4000-PSI IN 28 DAYS.
3. PROPORTIONS OF CONCRETE MATERIALS SHALL BE SUITABLE FOR THE INSTALLATION METHOD UTILIZED AND SHALL RESULT IN DURABLE CONCRETE FOR RESISTANCE TO LOCAL ANTICIPATED AGGRESSIVE ACTIONS. THE DURABILITY REQUIREMENTS OF ACI 318-14 SHALL BE SATISFIED BASED ON THE CONDITIONS EXPECTED AT THE SITE.
4. CONCRETE SHALL BE PLACED IN A MANNER THAT WILL PREVENT SEGREGATION OF CONCRETE MATERIALS, INFILTRATION OF WATER OR SOIL, AND OTHER OCCURRENCES THAT MAY DECREASE THE STRENGTH OR DURABILITY OF THE FOUNDATION.
5. FREE FALL CONCRETE MAY BE USED PROVIDED FALL IS VERTICAL DOWN WITHOUT HITTING THE SIDES OF THE EXCAVATION, FORM WORK, REINFORCING BARS, FORM TIES, CAGE BRACING, OR OTHER OBSTRUCTIONS. UNDER NO CIRCUMSTANCES SHALL CONCRETE FALL THROUGH WATER.
6. THE MAXIMUM SIZE OF THE AGGREGATE SHALL NOT EXCEED A SIZE SUITABLE FOR THE INSTALLATION METHODS UTILIZED OR 2/3-CLEAR DISTANCE BEHIND OR BETWEEN REINFORCING. THE MAXIMUM SIZE MAY BE INCREASED TO 2/3-CLEAR DISTANCE PROVIDED WORKABILITY AND METHODS OF CONSOLIDATION SUCH AS VIBRATING WILL PREVENT HONEYCOMBS AND VOIDS.

FINISHING:

1. THE TOP OF THE FOUNDATION SHALL BE SLOPED TO DRAIN WITH A FLOATED FINISH.
2. THE EXPOSED EDGES OF THE CONCRETE SHALL BE CHAMFERED ½" X ½".

SUB-GRADE PREPARATION:

1. SHAPE TOP OF SUB-GRADE TO THE LINES AND GRADES SHOWN ON THE DRAWINGS.
2. MAINTAIN TOP OF SUB-GRADE IN A FREE-DRAINING CONDITION.
3. DO NOT STOCKPILE MATERIALS ON TOP OF SUB-GRADE UNLESS AUTHORIZED BY CONSTRUCTION MANAGER.
4. USE 6 IN LIFTS TO COMPACT SUB-GRADE TO A 95 PERCENT COMPACTION AT A MAXIMUM DRY DENSITY OF 115 PCF.
5. CONSTRUCT TOP OF SUB-GRADE WITHIN ONE INCH OF ESTABLISHED GRADE AND CROSS-SECTION.

PREPARED BY:
ENGINEERED TOWER SOLUTIONS
3227 WELLINGTON COURT
RALEIGH, NC 27615
o 919-782-2710, f 919-435-0631
www.ets-pllc.com

PREPARED FOR:
DUKE ENERGY.

SITE NAME
SUMTER ALICE DRIVE 230 SUB
SITE NUMBER

DESCRIPTION
FOUNDATION DESIGN DRAWINGS

SITE ADDRESS
1242 ALICE DRIVE
SUMTER, SC 29150
SUMTER COUNTY

LATITUDE/LONGITUDE
33.9528533° N, 80.3906961° W

SEAL
SOUTH CAROLINA PROFESSIONAL ENGINEER No. 22980 CHRISTOPHER G. PEY
07/02/2025
SOUTH CAROLINA ENGINEERED TOWER SOLUTIONS, PLLC NO. 4634 CERTIFICATE OF AUTHORIZATION

REV	DATE	DETAILS
0	07/02/2025	FOR CONSTRUCTION
1		
2		

DRAWN BY: DJN | CHECKED BY: JSH

SHEET TITLE:
PROJECT NOTES

SHEET # N-1 | CURRENT REV # 0 | ETS # 24131424.STR.3851

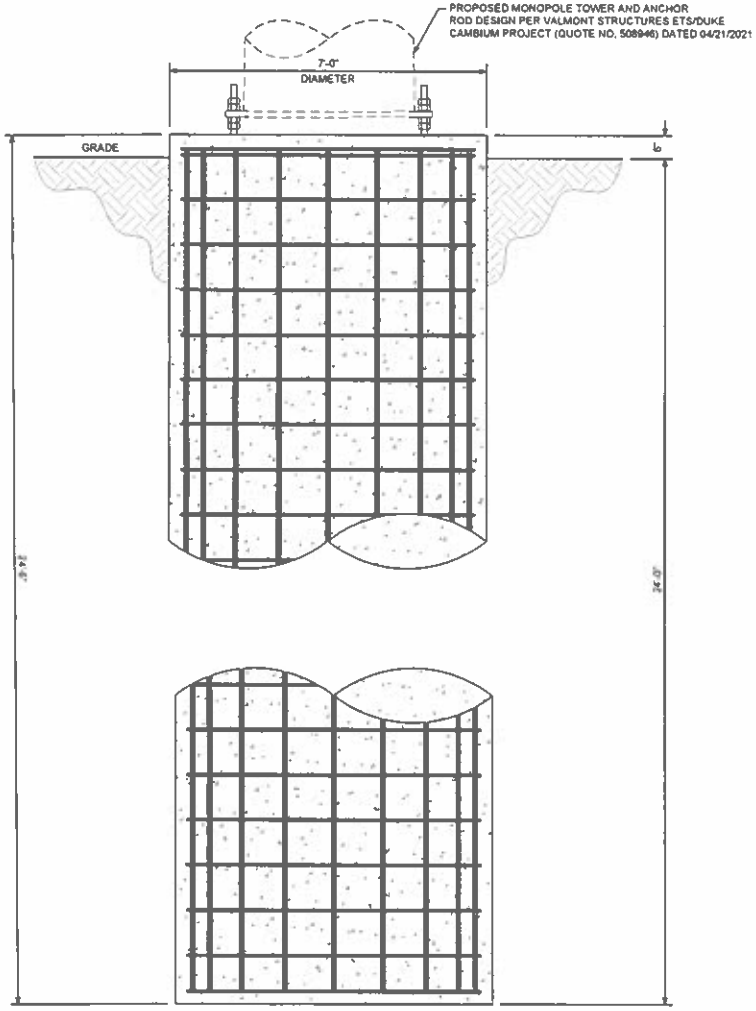

ELEVATION VIEW

SCALE: 3/8" = 1'-0"

FOUNDATION MATERIAL SCHEDULE

PART	SIZE	QUANTITY	NOTES
VERTICAL REBAR	#8 (24.0 FT LONG)	24	EVENLY SPACED
REBAR TIES	#4 (22.6 FT LONG)	33	(2) WITHIN TOP 5" OF PIER, THEN 6" O.C. WITHIN ANCHOR BOLTS, THEN 12" O.C.
CONCRETE	-	34.92 CUBIC YARDS	4,000 PSI

NOTES:

1. CONCRETE SHALL HAVE A MINIMUM 28-DAY COMPRESSIVE STRENGTH OF 4,000 PSI, IN ACCORDANCE WITH ACI 318-19.
2. REBAR TO CONFORM TO ASTM SPECIFICATIONS A615 GRADE 60.
3. ALL REBAR TO HAVE A MINIMUM OF 3" CONCRETE COVER.
4. REBAR TIES SPLICE LOCATIONS TO ALTERNATE SIDES THROUGHOUT LENGTH OF REBAR CAGE.
5. ALL EXPOSED CONCRETE CORNERS TO BE CHAMFERED ¾".
6. THIS FOUNDATION DESIGN IS BASED ON THE GEOTECHNICAL REPORT BY ETS, PLLC JOB. NO. 24131421 DATE 06/12/2025.
7. SEE THE GEOTECHNICAL REPORT FOR DRILLED PIER INSTALLATION REQUIREMENTS, IF SPECIFIED.

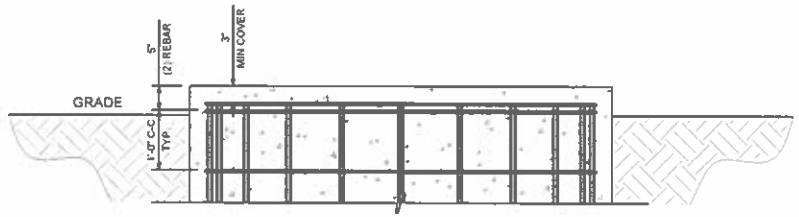

REBAR TIES DETAIL (TOP)

SCALE: NTS

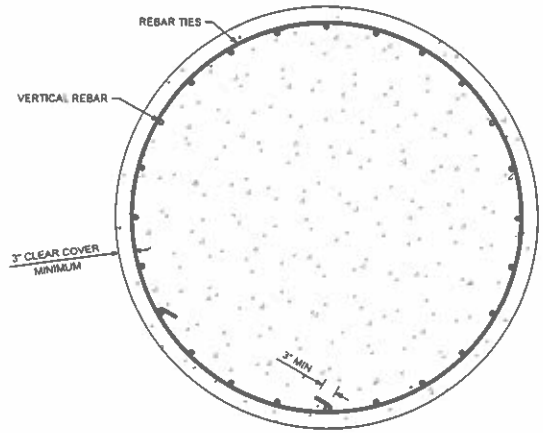

PLAN VIEW

SCALE: 3/8" = 1'-0"

PREPARED BY

ENGINEERED TOWER SOLUTIONS

3227 WELLINGTON COURT
RALEIGH, NC 27615
o: 919-782-2710, f: 919-435-0831
www.ets-pllc.com

PREPARED FOR:

DUKE ENERGY.

SITE NAME:

SUMTER ALICE DRIVE 230 SUB

SITE NUMBER:

DESCRIPTION:

FOUNDATION DESIGN DRAWINGS

SITE ADDRESS:
1242 ALICE DRIVE
SUMTER, SC 29150
SUMTER COUNTY

LATITUDE/LONGITUDE:
33.9528533° N, 80.3906901° W

SEAL:

SOUTH CAROLINA REGISTERED PROFESSIONAL ENGINEER No. 22980 CHRISTOPHER G. PLY

07/02/2025

SOUTH CAROLINA ENGINEERED TOWER SOLUTIONS, PLLC NO. 4834 CERTIFICATE OF AUTHORIZATION

REV	DATE	DETAILS
0	07/02/2025	FOR CONSTRUCTION
1		
2		

DRAWN BY: DJN | CHECKED BY: JSH

SHEET TITLE

DRILLED SHAFT FOUNDATION DETAILS

SHEET # S-1 | CURRENT REV # 0 | ETS # 24131424.STR.3651

APPENDIX D

ADDITIONAL CALCULATIONS

Monopole Base Plate Connection

Site Info	
Site Name	mter Alice Drive 230 S

Analysis Considerations	
TIA-222 Revision	H
Grout Considered:	No
l_{ar} (in)	2.25

Applied Loads	
Moment (kip-ft)	1870.00
Axial Force (kips)	19.00
Shear Force (kips)	26.00

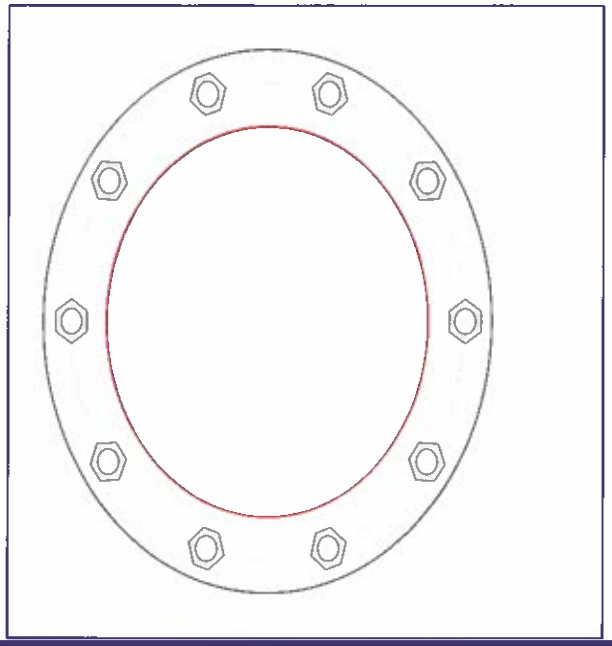

Connection Properties

Anchor Rod Data

(10) 2-1/4" ø bolts (A615-75 N; Fy=75 ksi, Fu=100 ksi) on 43" BC

Base Plate Data

49" OD x 2.75" Plate (A572-50; Fy=50 ksi, Fu=65 ksi)

Stiffener Data

N/A

Pole Data

35.17" x 0.375" 12-sided pole (A572-65; Fy=65 ksi, Fu=80 ksi)

Analysis Results

Anchor Rod Summary *(units of kips, kip-in)*

Pu_t = 206.61	ϕPn_t = 243.75	**Stress Rating**
Vu = 2.6	ϕVn = 149.1	**84.8%**
Mu = n/a	ϕMn = n/a	**Pass**

Base Plate Summary

Max Stress (ksi):	24.51	(Flexural)
Allowable Stress (ksi):	45	
Stress Rating:	**54.5%**	**Pass**

Analysis Date: 7/1/2025

Drilled Pier Foundation

Site Name:	Sumter Alice Drive 230 Sub
TIA-222 Revison:	H
Tower Type:	Monopole

Applied Loads	Comp.	Uplift
Moment (kip-ft)	1870	
Axial Force (kips)	19	
Shear Force (kips)	26	

Material Properties		
Concrete Strength, f'c:	4	ksi
Rebar Strength, Fy:	60	ksi
Tie Yield Strength, Fyt:	60	ksi

Pier Design Data		
Depth	24	ft
Ext. Above Grade	0	ft
Pier Section 1		
From 0' below grade to 24' below grade		
Pier Diameter	7	ft
Rebar Quantity	24	
Rebar Size	8	
Clear Cover to Ties	3	in
Tie Size	4	
Tie Spacing	12	in

Analysis Results		
Soil Lateral Check	*Compression*	*Uplift*
$D_{v=0}$ (ft from TOC)	5.03	-
Soil Safety Factor	1.88	-
Max Moment (kip-ft)	1986.04	-
Rating	*70.6%*	-
Soil Vertical Check	*Compression*	*Uplift*
Skin Friction (kips)	146.79	-
End Bearing (kips)	818.73	-
Weight of Concrete (kips)	109.20	-
Total Capacity (kips)	965.52	-
Axial (kips)	128.20	-
Rating	*13.3%*	-
Reinforced Concrete Flexure	*Compression*	*Uplift*
Critical Depth (ft from TOC)	4.76	-
Critical Moment (kip-ft)	1985.50	-
Critical Moment Capacity	3267.23	-
Rating	*60.8%*	-
Reinforced Concrete Shear	*Compression*	*Uplift*
Critical Depth (ft from TOC)	14.14	-
Critical Shear (kip)	208.36	-
Critical Shear Capacity	572.77	-
Rating	*36.4%*	-

Structural Foundation Rating	**60.8%**
Soil Interaction Rating	**70.6%**

Soil Profile

Groundwater Depth	4.2	# of Layers	9

Layer	Top (ft)	Bottom (ft)	Thickness (ft)	γ_{soil} (pcf)	$\gamma_{concrete}$ (pcf)	Cohesion (ksf)	Angle of Friction (degrees)	Calculated Ultimate Skin Friction Comp (ksf)	Calculated Ultimate Skin Friction Uplift (ksf)	Ultimate Skin Friction Comp Override (ksf)	Ultimate Skin Friction Uplift Override (ksf)	Ult. Net Bearing Capacity (ksf)	SPT Blow Count	Soil Type
1	0	3	3	105	150	0	0	0.000	0.000	0.00	0.00			Cohesionless
2	3	4	1	105	150	0	27	0.000	0.000	0.20	0.20			Cohesionless
3	4	4.3	0.3	105	87.6	0	29	0.000	0.000	0.20	0.20			Cohesionless
4	4.3	6	1.7	42.6	87.6	0	29	0.000	0.000	0.20	0.20			Cohesionless
5	6	8	2	52.6	87.6	0	30	0.000	0.000	0.30	0.30			Cohesionless
6	8	12	4	52.6	87.6	0	30	0.000	0.000	0.50	0.50			Cohesionless
7	12	17	5	42.6	87.6	0	27	0.00	0.00	0.60	0.60			Cohesionless
8	17	22	5	37.6	87.6	0.2	0	0.11	0.11	0.10	0.10			Cohesive
9	22	24	2	62.6	87.6	0	32	0.00	0.00	1.10	1.10	27		Cohesionless

ASCE Hazards Report

Address:
No Address at This Location

Standard: ASCE/SEI 7-16
Risk Category: III
Soil Class: D - Stiff Soil

Latitude: 33.95285
Longitude: -80.3907
Elevation: 166.25658952624744 ft (NAVD 88)

Wind

Results:

Wind Speed	132 Vmph
10-year MRI	75 Vmph
25-year MRI	84 Vmph
50-year MRI	91 Vmph
100-year MRI	99 Vmph

Data Source:	ASCE/SEI 7-16, Fig. 26.5-1C and Figs. CC.2-1–CC.2-4, and Section 26.5.2
Date Accessed:	Tue Jul 01 2025

Value provided is 3-second gust wind speeds at 33 ft above ground for Exposure C Category, based on linear interpolation between contours. Wind speeds are interpolated in accordance with the 7-16 Standard. Wind speeds correspond to approximately a 3% probability of exceedance in 50 years (annual exceedance probability = 0.000588, MRI = 1,700 years).

Site is in a hurricane-prone region as defined in ASCE/SEI 7-16 Section 26.2. Glazed openings need not be protected against wind-borne debris.

ASCE
AMERICAN SOCIETY OF CIVIL ENGINEERS

Seismic

Site Soil Class: D - Stiff Soil

Results:

S_S :	0.373	S_{D1} :	0.197
S_1 :	0.126	T_L :	8
F_a :	1.502	PGA :	0.212
F_v :	2.349	PGA_M :	0.294
S_{MS} :	0.56	F_{PGA} :	1.388
S_{M1} :	0.295	I_e :	1.25
S_{DS} :	0.373	C_v :	0.949

Seismic Design Category: C

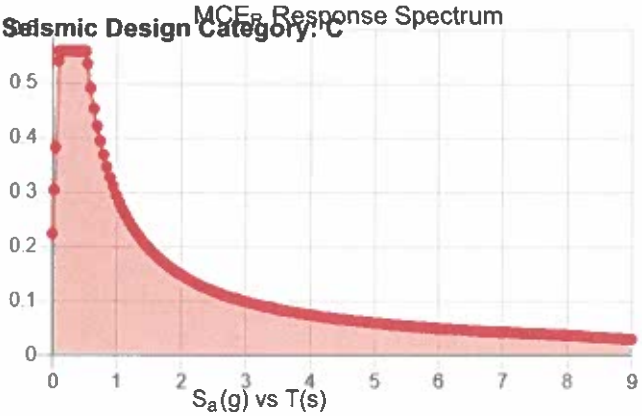

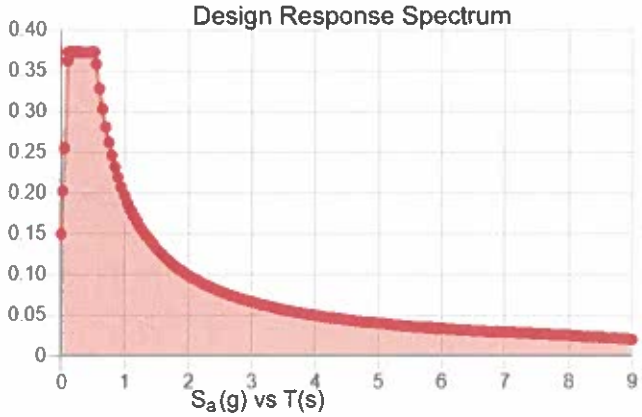

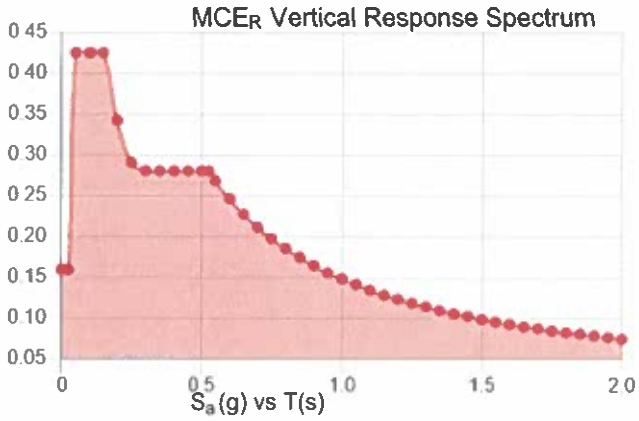

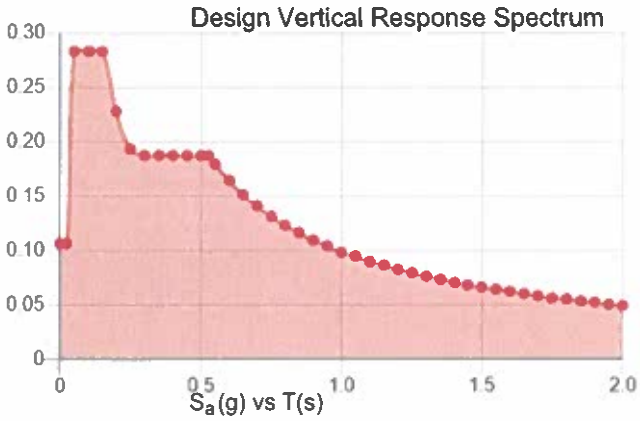

Data Accessed: **Tue Jul 01 2025**

Date Source:

USGS Seismic Design Maps based on ASCE/SEI 7-16 and ASCE/SEI 7-16 Table 1.5-2. Additional data for site-specific ground motion procedures in accordance with ASCE/SEI 7-16 Ch. 21 are available from USGS.

Ice

Results:

Ice Thickness:	1.00 in.
Concurrent Temperature:	15 F
Gust Speed	30 mph
Data Source:	Standard ASCE/SEI 7-16, Figs. 10-2 through 10-8
Date Accessed:	Tue Jul 01 2025

Ice thicknesses on structures in exposed locations at elevations higher than the surrounding terrain and in valleys and gorges may exceed the mapped values.

Values provided are equivalent radial ice thicknesses due to freezing rain with concurrent 3-second gust speeds, for a 500-year mean recurrence interval, and temperatures concurrent with ice thicknesses due to freezing rain. Thicknesses for ice accretions caused by other sources shall be obtained from local meteorological studies. Ice thicknesses in exposed locations at elevations higher than the surrounding terrain and in valleys and gorges may exceed the mapped values.

The ASCE Hazard Tool is provided for your convenience, for informational purposes only, and is provided "as is" and without warranties of any kind. The location data included herein has been obtained from information developed, produced, and maintained by third party providers, or has been extrapolated from maps incorporated in the ASCE standard. While ASCE has made every effort to use data obtained from reliable sources or methodologies, ASCE does not make any representations or warranties as to the accuracy, completeness, reliability, currency, or quality of any data provided herein. Any third-party links provided by this Tool should not be construed as an endorsement, affiliation, relationship, or sponsorship of such third-party content by or from ASCE.

ASCE does not intend, nor should anyone interpret, the results provided by this Tool to replace the sound judgment of a competent professional, having knowledge and experience in the appropriate field(s) of practice, nor to substitute for the standard of care required of such professionals in interpreting and applying the contents of this Tool or the ASCE standard.

In using this Tool, you expressly assume all risks associated with your use. Under no circumstances shall ASCE or its officers, directors, employees, members, affiliates, or agents be liable to you or any other person for any direct, indirect, special, incidental, or consequential damages arising from or related to your use of, or reliance on, the Tool or any information obtained therein. To the fullest extent permitted by law, you agree to release and hold harmless ASCE from any and all liability of any nature arising out of or resulting from any use of data provided by the ASCE Hazard Tool.

SITE MAP

GENERAL NOTES

THE FACILITY IS UNMANNED AND NOT FOR HUMAN HABITATION. THEREFORE HANDICAP ACCESS IS NOT REQUIRED FOR ROUTINE MAINTENANCE. THE PROJECT WILL NOT RESULT IN ANY SIGNIFICANT DISTURBANCE OR EFFECT ON DRAINAGE, NO SANITARY SEWER SERVICE, POTABLE WATER, OR TRASH DISPOSAL IS REQUIRED AND NO COMMERCIAL SIGNAGE IS PROPOSED.

SCOPE OF WORK

INSTALLATION OF A PROPOSED 120'± MONOPOLE, WITH NEW MOUNTED CAMBIUM 5GHz EQUIPMENT, WITHIN AN EXISTING DUKE ENERGY OWNED ELECTRICAL SUBSTATION.

CODE COMPLIANCE

ALL WORK AND MATERIALS SHALL BE PERFORMED AND INSTALLED IN ACCORDANCE WITH THE CURRENT EDITIONS OF THE FOLLOWING CODES AS ADOPTED BY THE LOCAL GOVERNING AUTHORITIES. NOTHING IN THESE PLANS IS TO BE CONSTRUED TO PERMIT WORK NOT CONFORMING TO THE FOLLOWING CODES.

- 2021 S.C. BUILDING CODE (2021 IBC W/ AMENDMENTS)
- 2021 S.C. EXISTING BUILDING CODE (2021 IEBC W/ AMENDMENTS)
- 2021 S.C. FIRE CODE (2021 IFC W/ AMENDMENTS)
- 2021 S.C. FUEL GAS CODE (2021 IFGC W/ AMENDMENTS)
- 2021 S.C. MECHANICAL CODE (2021 IMC W/ AMENDMENTS)
- 2021 S.C. PLUMBING CODE (2021 IPC W/ AMENDMENTS)
- 2020 S.C. ELECTRICAL CODE (2020 NEC W/ AMENDMENTS)
- 2021 S.C. INTERNATIONAL ENERGY CONSERVATION CODE (IECC)

South Carolina 811 Call Before You Dig.

SUBSTATION NAME:
SUMTER ALICE DRIVE 230 SUB

SUBSTATION TELECOM NUMBER:
SCSMT014

SUBSTATION TRANSMISSION NUMBER:
T3966

SUBSTATION ADDRESS:
1242 ALICE DRIVE
SUMTER, SC 29150

LATITUDE & LONGITUDE:
N 33° 57' 10.2718" , W 80° 23' 26.5131"

INDEX OF SHEETS

T-1	TITLE PAGE
1 OF 1	SURVEY
GN-1	GENERAL NOTES I
GN-2	GENERAL NOTES II
GN-3	GENERAL NOTES III
C-1.0	OVERALL PROPERTY PLAN
C-1.1	SUBSTATION COMPOUND PLAN
C-1.2	TRANSMISSION GROUNDING PLAN
C-1.3	TRANSMISSION CONDUIT PLAN
C-2	COMMUNICATION POLE ELEVATION & ANTENNA PLAN
C-3.1	DETAILS I
C-3.2	DETAILS II
C-3.3	DETAILS III
C-3.4	DETAILS IV
ATTACHED	FOUNDATION DESIGN DRAWINGS

SITE SUMMARY

SITE TYPE:	NEW CONSTRUCTION
STRUCTURE TYPE:	MONOPOLE
STRUCTURE OWNER:	DUKE ENERGY
SITE APPLICANT:	DUKE ENERGY
STRUCTURE HEIGHT (AGL):	120'±
OCCUPANCY TYPE:	UTILITY & MISCELLANEOUS (U)
STRUCTURE LATITUDE (NAD 83):	N 33° 57' 10.2718" (33.9528533°)
STRUCTURE LONGITUDE (NAD 83):	W 80° 23' 26.5131" (-080.3906981°)
PROPERTY OWNER:	DUKE ENERGY
JURISDICTION:	CITY OF SUMTER
COUNTY:	SUMTER
PARCEL ID:	2030005005
GROUND ELEV. (NAVD):	185.91'

SITE PHOTO

PROJECT TEAM

SURVEYOR NAME: ADDRESS: CITY, STATE, ZIP: CONTACT: PHONE:	JMT 2154 N. CENTER STREET SUITE A-101 NORTH CHARLESTON, SC 29406 RANDALL L. STEPP (843) 974-5650
CIVIL ENGINEER NAME: ADDRESS: CITY, STATE, ZIP: CONTACT: PHONE:	ENGINEERED TOWER SOLUTIONS 3227 WELLINGTON COURT RALEIGH, NC 27615 PAUL A. BRIDGES, P.E. (919) 782-2710
STRUCTURAL ENGINEER NAME: ADDRESS: CITY, STATE, ZIP: CONTACT: PHONE:	ENGINEERED TOWER SOLUTIONS 3227 WELLINGTON COURT RALEIGH, NC 27615 CHRISTOPHER G. PLY, P.E., S.E. (919) 782-2710
ELECTRICAL ENGINEER NAME: ADDRESS: CITY, STATE, ZIP: CONTACT: PHONE:	ENGINEERED TOWER SOLUTIONS 3227 WELLINGTON COURT RALEIGH, NC 27615 CHRISTOPHER G. PLY, P.E., S.E. (919) 782-2710
GEOTECHNICAL ENGINEER NAME: ADDRESS: CITY, STATE, ZIP: CONTACT: PHONE:	ENGINEERED TOWER SOLUTIONS 3227 WELLINGTON COURT RALEIGH, NC 27615 FREDERIC G. BOST, P.E. (919) 782-2710
POLE MANUFACTURER NAME: ADDRESS: CITY, STATE, ZIP: CONTACT: PHONE:	VALMONT INDUSTRIES 15000 VALMONT PLAZA OHAMA, NEBRASKA, 98154 CUSTOMER SERVICE 1(402) 963-1000

PREPARED BY:

ENGINEERED TOWER SOLUTIONS
3227 WELLINGTON COURT
RALEIGH, NC 27615
919-782-2710
www.ets-plc.com

PREPARED FOR:

DUKE ENERGY.

SUBSTATION NAME:
SUMTER ALICE DRIVE 230 SUB

SUBSTATION TRANSMISSION NUMBER:
T3966

SUBSTATION ADDRESS:
1242 ALICE DRIVE
SUMTER, SC 29150

LATITUDE/LONGITUDE:
33.9528533°, -080.3906981°

SEAL:

SOUTH CAROLINA
ENGINEERED TOWER SOLUTIONS, PLLC
NO. 4634
CERTIFICATE OF AUTHORIZATION
07/18/2025

COA:

SOUTH CAROLINA
No. 22980
CHRISTOPHER G. PLY
07/18/2025

REV	DATE	DETAILS
0	7/17/2025	CONSTRUCTION
1	07/18/2025	CONSTRUCTION
2		
3		

DRAWN BY: HM | CHECKED BY: AS

SHEET TITLE:

TITLE PAGE

SHEET # **T-1** | CURRENT REV # 1 | ETS # 24131424

2154 N. CENTER STREET
SUITE A-101
NORTH CHARLESTON, SC 29406
843-974-5650
P: (843) 556-2624 | www.jmt.com

VICINITY MAP NOT TO SCALE

LEGEND

LEVEL "B" GROUNDING GRID	GR
LEVEL "B" UNDERGROUND ELECTRIC	UE
FENCE LINE	X

NOTES:

- SURVEYED & MAPPED FOR: DUKE ENERGY PROGRESS, LLC
  JMT PROJECT NUMBER 24-01682-018
- TYPE OF WORK: SUE/GPR SCANNING AND AREA DESIGNATION UTILIZING MALA GPR AND RD 8000 UTILITY LOCATER
- SURVEYED DATA WAS LOCATED UTILIZING A CARLSON BRX7 GPS RECEIVER
- NO PROPERTY RESEARCH WAS PERFORMED
- THIS IS A WORK MAP ONLY SHOWING UNDERGROUND UTILITY ITEMS FOUND WITHIN THE REQUESTED WORK AREA ON THE DATE OF 2-17-25
- AERIAL INFORMATION SHOWN HEREON WAS FROM A FREE DOWNLOAD AND NO CHECK HAS BEEN PERFORMED ON THE ACCURACY OF THE DATA.
- SURVEY AS SHOWN WAS ESTABLISHED BY (SC VRS) GPS METHOD, AND RELATED TO SC STATE PLANE COORDINATE SYSTEM. A LOCAL PUBLISHED NGS MONUMENT WAS CHECKED FOR ACCURACY ON THE DAY OF FIELD WORK. THE DATUM IS NAD 83 (2011).

THIS MEDIA SHOULD NOT BE
CONSIDERED A CERTIFIED DOCUMENT.

I, _____, hereby state that to the best of my professional knowledge, information, and belief, the survey shown hereon was made in accordance with the requirements of the Standards of Practice Manual for Surveying in South Carolina, and meets or exceeds the requirements for a Class __ survey as specified therein."

Professional Land Surveyor Date

SOUTH CAROLINA PROFESSIONAL No. 27461 LAND SURVEYOR RANDALL L. STEPP

SOUTH CAROLINA JOHNSON, MIRMIRAN & THOMPSON INC. No. 3943 CERTIFICATE OF AUTHORIZATION

DUKE ENERGY PROGRESS, LLC
SUMTER-ALICE 230kv SUBSTATION

PURPOSE OF MAP
UNDERGROUND UTILTY DESIGNATION
- SUE/GPR LOCATION -

SUMTER COUNTY SUMTER S.C.

DATE: 02-24-25
SCALE: 1"=30'

CREW: EM-KF
DRAWN BY: MPS

DUKE ENERGY.

550 S. TRYON STREET
CHARLOTTE N.C. 28201-1007

GENERAL NOTES

1. ALL SITE WORK SHALL BE COMPLETED AS INDICATED ON THE DRAWINGS AND CARRIER PROJECT SPECIFICATIONS.

2. GENERAL CONTRACTOR SHALL VISIT THE SITE AND SHALL FAMILIARIZE THEMSELVES WITH ALL CONDITIONS AFFECTING THE PROPOSED WORK AND SHALL MAKE PROVISIONS. GENERAL CONTRACTOR SHALL BE RESPONSIBLE FOR FAMILIARIZING THEMSELVES WITH ALL CONTRACT DOCUMENTS, FIELD CONDITIONS, DIMENSIONS, AND SHALL CONFIRM THAT THE WORK MAY BE ACCOMPLISHED AS SHOWN PRIOR TO PROCEEDING WITH CONSTRUCTION. ANY DISCREPANCIES SHALL BE BROUGHT TO THE ATTENTION OF THE ENGINEER PRIOR TO THE COMMENCEMENT OF WORK.

3. ALL MATERIALS FURNISHED AND INSTALLED SHALL BE IN STRICT ACCORDANCE WITH ALL APPLICABLE CODES, REGULATIONS AND ORDINANCES. GENERAL CONTRACTOR SHALL ISSUE ALL APPROPRIATE NOTICES AND COMPLY WITH ALL LAWS, ORDINANCES, RULES, REGULATIONS, AND LAWFUL ORDERS OF ANY PUBLIC AUTHORITY REGARDING THE PERFORMANCE OF WORK.

4. ALL WORK CARRIED OUT SHALL COMPLY WITH ALL APPLICABLE MUNICIPAL AND UTILITY COMPANY SPECIFICATIONS AND LOCAL JURISDICTIONAL CODES, ORDINANCES, AND APPLICABLE REGULATIONS.

5. UNLESS NOTED OTHERWISE, THE WORK SHALL INCLUDE FURNISHING MATERIALS, EQUIPMENT, APPURTENANCES, AND LABOR NECESSARY TO COMPLETE ALL INSTALLATIONS AS INDICATED IN THESE DRAWINGS.

6. PLANS ARE NOT TO BE SCALED. THESE PLANS ARE INTENDED TO BE A DIAGRAMMATIC OUTLINE ONLY UNLESS OTHERWISE NOTED. DIMENSIONS SHOWN ARE TO FINISHED SURFACES UNLESS OTHERWISE NOTED. SPACING BETWEEN EQUIPMENT IS THE MINIMUM REQUIRED CLEARANCE. THEREFORE, IT IS CRITICAL TO FIELD VERIFY DIMENSIONS, SHOULD THERE BE ANY QUESTIONS REGARDING THE CONTRACT DOCUMENTS, THE CONTRACTOR SHALL BE RESPONSIBLE FOR OBTAINING A CLARIFICATION FROM THE ENGINEER PRIOR TO PROCEEDING WITH THE WORK. DETAILS ARE INTENDED TO SHOW DESIGN INTENT. MODIFICATIONS MAY BE REQUIRED TO SUIT JOB DIMENSIONS OR CONDITIONS AND SUCH MODIFICATIONS SHALL BE INCLUDED AS PART OF WORK AND PREPARED BY THE ENGINEER PRIOR TO PROCEEDING WITH WORK.

7. THE CONTRACTOR SHALL INSTALL ALL EQUIPMENT AND MATERIALS IN ACCORDANCE WITH MANUFACTURER'S RECOMMENDATIONS UNLESS SPECIFICALLY STATED OTHERWISE.

8. IF THE SPECIFIED EQUIPMENT CANNOT BE INSTALLED AS SHOWN IN THESE DRAWINGS, THE CONTRACTOR SHALL PROPOSE AN ALTERNATIVE INSTALLATION SPACE FOR APPROVAL BY THE ENGINEER PRIOR TO PROCEEDING.

9. GENERAL CONTRACTOR SHALL BE RESPONSIBLE FOR THE SAFETY OF WORK AREA, ADJACENT AREAS AND BUILDING OCCUPANTS THAT ARE LIKELY TO BE AFFECTED BY THE WORK UNDER THIS CONTRACT. WORK SHALL CONFORM TO ALL OSHA REQUIREMENTS AND THE LOCAL JURISDICTION.

10. GENERAL CONTRACTOR SHALL COORDINATE WORK AND SCHEDULE WORK ACTIVITIES WITH OTHER DISCIPLINES.

11. ERECTION SHALL BE DONE IN WORKMANLIKE MANNER BY COMPETENT EXPERIENCED WORKMEN IN ACCORDANCE WITH APPLICABLE CODES AND THE BEST ACCEPTED PRACTICE. ALL MEMBERS SHALL BE LAID PLUMB AND TRUE AS INDICATED IN THE DRAWINGS.

12. SEAL PENETRATIONS THROUGH FIRE RATED AREAS WITH UL LISTED MATERIALS APPROVED BY LOCAL JURISDICTION. CONTRACTOR SHALL KEEP AREA CLEAN, HAZARD FREE, AND DISPOSE OF ALL DEBRIS.

13. THE SCOPE OF WORK FOR THIS PROJECT IS REPRESENTED BY DARK SHADED LINES AND NOTES. CONTRACTOR SHALL NOTIFY THE GENERAL CONTRACTOR OF ANY EXISTING CONDITIONS THAT DEVIATE FROM THE DRAWINGS PRIOR TO BEGINNING CONSTRUCTION.

14. CONTRACTOR SHALL PROVIDE WRITTEN NOTICE TO THE CONSTRUCTION MANAGER 48 HOURS PRIOR TO THE COMMENCEMENT OF WORK.

15. THE CONTRACTOR SHALL PROTECT EXISTING IMPROVEMENTS, PAVEMENTS, CURBS, LANDSCAPING AND STRUCTURES. ANY DAMAGED PART SHALL BE REPAIRED AT CONTRACTOR'S EXPENSE TO THE SATISFACTION OF THE OWNER.

16. THE CONTRACTOR SHALL CONTACT UTILITY LOCATING SERVICES PRIOR TO THE START OF CONSTRUCTION.

17. GENERAL CONTRACTOR SHALL COORDINATE AND MAINTAIN ACCESS FOR ALL TRADES AND CONTRACTORS TO THE SITE AND/OR BUILDING.

18. THE GENERAL CONTRACTOR SHALL BE RESPONSIBLE FOR SECURITY OF THE SITE FOR THE DURATION OF CONSTRUCTION UNTIL JOB COMPLETION.

19. THE GENERAL CONTRACTOR SHALL MAINTAIN IN GOOD CONDITION ONE COMPLETE SET OF PLANS WITH ALL REVISIONS, ADDENDA, AND CHANGE ORDERS ON THE PREMISES AT ALL TIMES.

20. THE GENERAL CONTRACTOR SHALL PROVIDE PORTABLE FIRE EXTINGUISHERS WITH A RATING OF NO LESS THAN 2-A OR 2-A:10-B:C AND SHALL BE WITHIN 25 FEET OF TRAVEL DISTANCE TO ALL PORTIONS OF WHERE THE WORK IS BEING COMPLETED DURING CONSTRUCTION.

GENERAL NOTES (CONTINUED)

21. ALL EXISTING ACTIVE SEWER, WATER, GAS, ELECTRIC, AND OTHER UTILITIES SHALL BE PROTECTED AT ALL TIMES, AND WHERE REQUIRED FOR THE PROPER EXECUTION OF THE WORK, SHALL BE RELOCATED AS DIRECTED BY THE ENGINEER. EXTREME CAUTION SHOULD BE USED BY THE CONTRACTOR WHEN EXCAVATING OR DRILLING PIERS AROUND OR NEAR UTILITIES. CONTRACTOR SHALL PROVIDE SAFETY TRAINING FOR THE WORKING CREW. THIS SHALL INCLUDE BUT NOT BE LIMITED TO A) FALL PROTECTION. B) CONFINED SPACE, C) ELECTRICAL SAFETY, AND D) TRENCHING & EXCAVATION.

22. ALL EXISTING INACTIVE SEWER, WATER, GAS, ELECTRIC, AND OTHER UTILITIES, WHICH INTERFERE WITH THE EXECUTION OF THE WORK, SHALL BE REMOVED, CAPPED, PLUGGED OR OTHERWISE DISCONNECTED AT POINTS WHICH WILL NOT INTERFERE WITH THE EXECUTION OF THE WORK, AS DIRECTED BY THE RESPONSIBLE ENGINEER, AND SUBJECT TO THE APPROVAL OF THE OWNER AND/OR LOCAL UTILITIES.

23. THE AREAS OF THE OWNER'S PROPERTY DISTURBED BY THE WORK AND NOT COVERED BY THE COMMUNICATION POLE, EQUIPMENT OR DRIVEWAY, SHALL BE GRADED TO A UNIFORM SLOPE, AND STABILIZED TO PREVENT EROSION.

24. CONTRACTOR SHALL MINIMIZE DISTURBANCE TO THE EXISTING SITE DURING CONSTRUCTION. EROSION CONTROL MEASURES, IF REQUIRED DURING CONSTRUCTION, SHALL BE IN CONFORMANCE WITH THE FEDERAL AND LOCAL JURISDICTION FOR EROSION AND SEDIMENT CONTROL.

25. NO FILL OR EMBANKMENT MATERIAL SHALL BE PLACED ON FROZEN GROUNDING. FROZEN MATERIALS, SNOW OR ICE SHALL NOT BE PLACED IN ANY FILL OR EMBANKMENT.

26. THE SUBGRADE SHALL BE BROUGHT TO A SMOOTH UNIFORM GRADE AND COMPACTED TO 95 PERCENT STANDARD PROCTOR DENSITY UNDER PAVEMENT AND STRUCTURES AND 80 PERCENT STANDARD PROCTOR DENSITY IN OPEN SPACE. ALL TRENCHES IN PUBLIC RIGHT OF WAY SHALL BE BACKFILLED WITH FLOWABLE FILL OR OTHER MATERIAL PRE-APPROVED BY THE LOCAL JURISDICTION.

27. ALL NECESSARY RUBBISH, STUMPS, DEBRIS, STICKS, STONES, AND OTHER REFUSE SHALL BE REMOVED FROM THE SITE AND DISPOSED OF IN A LAWFUL MANNER.

28. ALL BROCHURES, OPERATING AND MAINTENANCE MANUALS, CATALOGS, SHOP DRAWINGS, AND OTHER DOCUMENTS SHALL BE TURNED OVER TO THE GENERAL CONTRACTOR AT COMPLETION OF CONSTRUCTION AND PRIOR TO PAYMENT.

29. CONTRACTOR SHALL SUBMIT A COMPLETE SET OF AS-BUILT REDLINES TO THE GENERAL CONTRACTOR UPON COMPLETION OF PROJECT AND PRIOR TO FINAL PAYMENT.

30. CONTRACTOR SHALL LEAVE PREMISES IN A CLEAN CONDITION.

31. THE PROPOSED FACILITY WILL BE UNMANNED AND DOES NOT REQUIRE POTABLE WATER OR SEWER SERVICE, AND IS NOT FOR HUMAN HABITAT (NO HANDICAP ACCESS REQUIRED).

32. STRUCTURE IS LIMITED TO PERIODIC MAINTENANCE AND INSPECTION, APPROXIMATELY 2 TIMES PER MONTH, BY CARRIER TECHNICIANS.

33. NO OUTDOOR STORAGE OR SOLID WASTE CONTAINERS ARE PROPOSED.

34. ALL MATERIAL SHALL BE FURNISHED AND WORK SHALL BE PERFORMED IN ACCORDANCE WITH THE LATEST CARRIER GROUNDING STANDARD. IN CASE OF A CONFLICT BETWEEN THE CONSTRUCTION SPECIFICATION AND THE DRAWINGS, THE DRAWINGS SHALL GOVERN.

35. CONTRACTORS SHALL BE RESPONSIBLE FOR OBTAINING ALL PERMITS AND INSPECTIONS REQUIRED FOR CONSTRUCTION. IF CONTRACTOR CANNOT OBTAIN A PERMIT, THEY MUST NOTIFY THE GENERAL CONTRACTOR IMMEDIATELY.

36. CONTRACTOR SHALL REMOVE ALL TRASH AND DEBRIS FROM THE SITE ON A DAILY BASIS.

37. INFORMATION SHOWN ON THESE DRAWINGS WAS OBTAINED FROM SITE VISITS AND/OR DRAWINGS PROVIDED BY THE SITE OWNER. CONTRACTORS SHALL NOTIFY THE ENGINEER OF ANY DISCREPANCIES PRIOR TO ORDERING MATERIAL OR PROCEEDING WITH CONSTRUCTION.

38. ALL CABLE INSTALLATIONS TO FOLLOW MANUFACTURER'S INSTRUCTIONS AND RECOMMENDATIONS.

39. NO WHITE STROBE LIGHTS ARE PERMITTED. LIGHTING IF REQUIRED, WILL MEET FAA STANDARDS AND REQUIREMENTS.

ANTENNA MOUNTING NOTES

1. ALL STEEL MATERIALS SHALL BE GALVANIZED AFTER FABRICATION IN ACCORDANCE WITH ASTM A123 "ZINC (HOT-DIP GALVANIZED) COATINGS ON IRON AND STEEL PRODUCTS", UNLESS NOTED OTHERWISE.

2. ALL BOLTS, ANCHORS AND MISCELLANEOUS HARDWARE SHALL BE GALVANIZED IN ACCORDANCE WITH ASTM A153 "ZINC-COATING (HOT-DIP) ON IRON AND STEEL HARDWARE", UNLESS NOTED OTHERWISE.

3. DAMAGED GALVANIZED SURFACES SHALL BE REPAIRED BY COLD GALVANIZING IN ACCORDANCE WITH ASTM A780.

4. ALL ANTENNA MOUNTS SHALL BE INSTALLED WITH LOCK NUTS, DOUBLE NUTS AND SHALL BE TORQUED TO MANUFACTURER'S RECOMMENDATIONS.

5. CONTRACTOR SHALL INSTALL ANTENNA PER MANUFACTURER'S RECOMMENDATION FOR INSTALLATION AND GROUNDING.

6. PRIOR TO SETTING ANTENNA AZIMUTHS AND DOWNTILTS, ANTENNA CONTRACTOR SHALL CHECK THE ANTENNA MOUNT FOR TIGHTNESS AND ENSURE THAT THEY ARE PLUMB. ANTENNA AZIMUTHS SHALL BE SET FROM TRUE NORTH AND BE ORIENTED WITHIN +/- 5% AS DEFINED BY THE RFDS. ANTENNA DOWNTILTS SHALL BE WITHIN +/- 0.5% AS DEFINED BY THE RFDS. REFER TO ND-00246.

7. CONTRACTOR SHALL VERIFY THE DOWN-TILT OF EACH ANTENNA WITH A DIGITAL LEVEL.

TORQUE REQUIREMENTS

1. ALL RF CONNECTIONS SHALL BE TIGHTENED BY A TORQUE WRENCH.
2. ALL RF CONNECTIONS, GROUNDING HARDWARE AND ANTENNA HARDWARE SHALL HAVE A TORQUE MARK INSTALLED IN A CONTINUOUS STRAIGHT LINE FROM BOTH SIDES OF THE CONNECTION.
3. RF CONNECTION BOTH SIDES OF THE CONNECTOR.
4. GROUNDING AND ANTENNA HARDWARE ON THE NUT SIDE STARTING FROM THE THREADS TO THE SOLID SURFACE. EXAMPLE OF SOLID SURFACE: GROUND BAR, ANTENNA BRACKET METAL.
5. ALL 2", 3" & 4" ANTENNA HARDWARE SHALL BE TIGHTENED TO 9 LB-FT (12 NM).
6. ALL 6" ANTENNA HARDWARE SHALL BE TIGHTENED TO 43 LB-FT (58 NM).
7. ALL GROUNDING HARDWARE SHALL BE TIGHTENED UNTIL THE LOCK WASHER COLLAPSES AND THE GROUNDING HARDWARE IS NO LONGER LOOSE.
8. ALL DIN TYPE CONNECTIONS SHALL BE TIGHTENED TO 18-22 LB-FT (24.4-29.8 NM).
9. ALL N TYPE CONNECTIONS SHALL BE TIGHTENED TO 15-20 LB-IN (1.7-2.3 NM).

COAXIAL CABLE NOTES

1. TYPES AND SIZES OF THE ANTENNA CABLE ARE BASED ON ESTIMATED LENGTHS. PRIOR TO ORDERING CABLE, CONTRACTOR SHALL VERIFY ACTUAL LENGTH BASED ON CONSTRUCTION LAYOUT AND NOTIFY THE PROJECT MANAGER IF ACTUAL LENGTHS EXCEED ESTIMATED LENGTHS.

2. CONTRACTOR SHALL CONFIRM COAX COLOR CODING PRIOR TO CONSTRUCTION. REFER TO "ANTENNA SYSTEM LABELING STANDARD" ND-00027 LATEST VERSION.

3. ALL JUMPERS TO THE ANTENNAS SHALL BE 1/2" DIA. LMR 400 AND SHALL NOT EXCEED 3'-0".

4. ALL COAXIAL CABLE SHALL BE SECURED TO THE DESIGNED SUPPORT STRUCTURE, IN AN APPROVED MANNER, AT DISTANCES NOT TO EXCEED 4'-0" OC.

5. CONTRACTOR SHALL FOLLOW ALL MANUFACTURER'S RECOMMENDATIONS REGARDING BOTH THE INSTALLATION AND GROUNDING OF ALL COAXIAL CABLES, CONNECTORS, ANTENNAS, AND ALL OTHER EQUIPMENT.

6. CONTRACTOR SHALL WEATHERPROOF ALL ANTENNA CONNECTORS WITH SELF AMALGAMATING TAPE. WEATHERPROOFING SHALL BE COMPLETED IN STRICT ACCORDANCE WITH INDUSTRY STANDARDS.

GENERAL CABLE AND EQUIPMENT NOTES

1. CONTRACTOR SHALL BE RESPONSIBLE TO VERIFY ANTENNA, TMAS, DIPLEXERS, AND COAX CONFIGURATION, MAKE AND MODELS PRIOR TO INSTALLATION.

2. ALL CONNECTIONS FOR HANGERS, SUPPORTS, BRACING, ETC. SHALL BE INSTALLED PER MANUFACTURER'S RECOMMENDATIONS.

3. CONTRACTOR SHALL REFERENCE THE STRUCTURAL ANALYSIS/DESIGN DRAWINGS FOR DIRECTIONS ON CABLE DISTRIBUTION/ROUTING.

PREPARED BY:

ENGINEERED TOWER SOLUTIONS
3227 WELLINGTON COURT
RALEIGH, NC 27615
919-782-2710
www.ets-pllc.com

PREPARED FOR:

DUKE ENERGY.

SUBSTATION NAME:
SUMTER ALICE DRIVE 230 SUB

SUBSTATION TRANSMISSION NUMBER:
T3966

SUBSTATION ADDRESS:
1242 ALICE DRIVE
SUMTER, SC 29150

LATITUDE/LONGITUDE:
33.9528533°, -080.3905981°

SEAL:

SOUTH CAROLINA CERTIFICATE OF AUTHORIZATION
ENGINEERED TOWER SOLUTIONS, PLLC
NO 4534
07/18/2025

COA:

CHRISTOPHER G. PLY
No. 22980
07/18/2025

REV	DATE	DETAILS
0	7/17/2025	CONSTRUCTION
1	07/18/2025	CONSTRUCTION
2		
3		

DRAWN BY: HM | CHECKED BY: AS

SHEET TITLE:

GENERAL NOTES I

SHEET # GN-1 | CURRENT REV # 1 | ETS # 24131424

GENERAL CABLE AND EQUIPMENT NOTES

1. ALL OUTDOOR RF CONNECTORS/CONNECTIONS SHALL BE WEATHERPROOFED, EXCEPT THE RET CONNECTORS, USING BUTYL TAPE AFTER INSTALLATION AND FINAL CONNECTIONS ARE MADE. BUTYL TAPE SHALL HAVE A MINIMUM OF ONE-HALF TAPE WIDTH OVERLAP ON EACH TURN AND EACH LAYER SHALL BE WRAPPED THREE TIMES. WEATHERPROOFING SHALL BE SMOOTH WITHOUT BUCKLING. BUTYL BLEEDING IS NOT ALLOWED.
2. IF REQUIRED TO PAINT ANTENNAS AND/OR COAX:
   - 2.1. TEMPERATURE SHALL BE ABOVE 50° F.
   - 2.2. PAINT COLOR MUST BE APPROVED BY BUILDING OWNER/LANDLORD.
   - 2.3. FOR REGULATED TOWERS, FAA/FCC APPROVED PAINT IS REQUIRED.
   - 2.4. DO NOT PAINT OVER COLOR CODING OR ON EQUIPMENT MODEL NUMBERS.
3. ALL PROPOSED GROUND BAR DOWNLEADS ARE TO BE TERMINATED TO THE EXISTING ADJACENT GROUND BAR DOWNLEADS A MINIMUM DISTANCE OF 4'-0" BELOW GROUND BAR. TERMINATIONS MAY BE EXOTHERMIC OR COMPRESSION.
4. ALL CONNECTIONS FOR HANGERS, SUPPORTS, BRACING, ETC. SHALL BE INSTALLED PER MANUFACTURER'S SPECIFICATION & RECOMMENDATIONS,NO BOLT THREADS TO PROTRUDE MORE THAN 1-1/2" [.038M].
5. 90 SHORT SWEEPS UNDER ANTENNA ARM. ALL CABLES MUST ONLY TRANSITION ON THE INSIDE OR BOTTOM OF ARMS (NO CABLE ON TOP OF ARMS).
6. USE 90 CONNECTOR AT CABLE CONNECTION TO ANTENNAS.
7. PLACE GPS ON ARM WITH SOUTHERN SKY EXPOSURE AT MINIMUM 6' [1.83] FROM TRANSMIT ANTENNA, WHICH IS 24" [.61M] AWAY FROM CENTER OF POLE.
8. USE 1/2" [.013M] CABLE ON ANTENNAS UNLESS OTHERWISE SPECIFIED.
9. FILL VOID AROUND CABLES AT CONDUIT OPENING WITH FOAM SEALANT TO PREVENT WATER INTRUSION.

FIBER & POWER CABLE MOUNTING

1. FOR VERTICAL RUNS: ON TOWERS OR POLES, ALWAYS UNREEL THE SPOOL FROM THE TOP DOWN. ENSURE NO STRAIN IS PLACED ON THE FIRST 3 FEET OF THE CABLE, AND THAT THE CABLE IS SUPPORTED EVERY THREE FEET VERTICALLY. NEVER ALLOW THE CABLE TO EXPERIENCE THE STRAIN OF THE CABLE SPOOL WEIGHT. ANY BENDS SHALL BE SUPPORTED DIRECTLY ABOVE AND BELOW THE BEND. THE BOTTOM BEND SHALL HAVE A DRIP LOOP WITH A MINIMUM ONE FOOT BEND RADIUS AT 120". IT IS RECOMMENDED THE FIBER BE TESTED BEFORE AND AFTER INSTALLATION FOR NO GREATER THAN .02 dB LOSS.

STRUCTURAL STEEL NOTES

1. THE FABRICATION AND ERECTION OF STRUCTURAL STEEL SHALL CONFORM TO THE AISC SPECIFICATION FOR MANUAL OF STEEL CONSTRUCTION, LOAD AND RESISTANCE FACTOR DESIGN, 15TH EDITION.
2. UNLESS OTHERWISE NOTED, ALL STRUCTURAL ELEMENTS SHALL CONFORM TO THE FOLLOWING REQUIREMENTS.
   STRUCTURAL STEEL:
   - ANGLE: ASTM A36
   - PIPE/TUBE: ASTM A500-50
   - PLATE: ASTM A36

   A. ALL BOLTS, ASTM A325 TYPE I GALVANIZED HIGH STRENGTH BOLTS.
   B. ALL U-BOLTS, ASTM A193 GRADE B7
   C. ALL NUTS, ASTM A563 CARBON AND ALLOY STEEL NUTS.
   D. ALL WASHERS, ASTM F436 HARDENED STEEL WASHERS.
3. ALL CONNECTIONS NOT FULLY DETAILED ON THESE PLANS SHALL BE DETAILED BY THE STEEL FABRICATOR IN ACCORDANCE WITH AISC SPECIFICATION FOR MANUAL OF STEEL CONSTRUCTION, LOAD AND RESISTANCE FACTOR DESIGN, 15TH EDITION.
4. HOLES SHALL NOT BE FLAME CUT THRU STEEL UNLESS APPROVED BY THE ENGINEER.
5. HOT-DIP GALVANIZE ALL ITEMS UNLESS OTHERWISE NOTED, AFTER FABRICATION WHERE PRACTICABLE. GALVANIZING: ASTM A123, ASTM, A153/A153M OR ASTM A653/A653M, G90, AS APPLICABLE.
6. REPAIR DAMAGED SURFACES WITH GALVANIZING REPAIR METHOD AND PAINT CONFORMING TO ASTM A780 OR BY APPLICATION OF STICK OR THICK PASTED MATERIAL SPECIFICALLY DESIGNED FOR REPAIR OF GALVANIZING. CLEAN AREAS TO BE REPAIRED AND REMOVE SLAG FROM WELDS. HEAT SURFACES TO WHICH STICK OR PASTE MATERIAL IS APPLIED, WITH A TORCH TO A TEMPERATURE SUFFICIENT TO MELT THE METALLICS IN STICK OR PASTED. SPREAD MOLTEN MATERIAL UNIFORMLY OVER SURFACES TO BE COATED AND WIPE OFF EXCESS MATERIAL.
7. A NUT LOCKING DEVICE SHALL BE INSTALLED ON ALL PROPOSED AND/OR REPLACED BOLTS.
8. ALL PROPOSED AND/OR REPLACED BOLTS SHALL BE OF SUFFICIENT LENGTH TO EXCLUDE THE THREADS FROM THE SHEAR PLANE.
9. ALL PROPOSED AND/OR REPLACED BOLTS SHALL BE OF SUFFICIENT LENGTH SUCH THAT THE END OF THE BOLT BE AT LEAST FLUSH WITH THE FACE OF THE NUT. IT IS NOT PERMITTED FOR THE BOLT END TO BE BELOW THE FACE OF THE NUT AFTER TIGHTENING IS COMPLETED.
10. GALVANIZED ASTM A325 BOLTS SHALL NOT BE REUSED.

BOLT TIGHTENING PROCEDURE

1. CONNECTION BOLTS SUBJECT TO DIRECT TENSION SHALL BE INSTALLED AND TIGHTENED AS PER SECTION 8.2 OF THE AISC SPECIFICATION FOR STRUCTURAL JOINTS USING A325 OR A490 BOLTS, LOCATED IN THE AISC MANUAL OF STEEL CONSTRUCTION. THE INSTALLATION PROCEDURE IS PARAPHRASED AS FOLLOWS:
2. FASTENERS SHALL BE INSTALLED IN PROPERLY ALIGNED HOLES AND TIGHTENED BY ONE OF THE METHODS DESCRIBED IN SUBSECTION 8.2.1 THROUGH 8.2.4.
   8.2.1 TURN-OF-THE-NUT TIGHTENING. BOLTS SHALL BE INSTALLED IN ALL HOLES OF THE CONNECTION AND BROUGHT TO A SNUG TIGHT CONDITION AS DEFINED IN SECTION 8.1, UNTIL ALL THE BOLTS ARE SIMULTANEOUSLY SNUG TIGHT AND THE CONNECTION IS FULLY COMPACTED. FOLLOWING THIS INITIAL OPERATION ALL BOLTS IN THE CONNECTION SHALL BE TIGHTENED FURTHER BY THE APPLICABLE AMOUNT OF ROTATION SPECIFIED ABOVE. DURING THE TIGHTENING OPERATION THERE SHALL BE NO ROTATION OF THE PART NOT TURNED BY THE WRENCH. TIGHTENING SHALL PROGRESS SYSTEMATICALLY FROM THE MOST RIGID PART OF THE JOINT IN A MANNER THAT WILL MINIMIZE RELAXATION OF PREVIOUSLY PRETENSIONED BOLTS.
3. TIGHTEN CONNECTION BOLTS BY AISC - "TURN OF THE NUT" METHOD, USING THE CHART BELOW.

BOLT LENGTHS UP TO AND INCLUDING FOUR DIA.

1/2"	BOLTS UP TO AND INCLUDING 2.0 INCH LENGTH	+1/3 TURN BEYOND SNUG TIGHT
5/8"	BOLTS UP TO AND INCLUDING 2.5 INCH LENGTH	+1/3 TURN BEYOND SNUG TIGHT
3/4"	BOLTS UP TO AND INCLUDING 3.0 INCH LENGTH	+1/3 TURN BEYOND SNUG TIGHT
7/8"	BOLTS UP TO AND INCLUDING 3.5 INCH LENGTH	+1/3 TURN BEYOND SNUG TIGHT
1"	BOLTS UP TO AND INCLUDING 4.0 INCH LENGTH	+1/3 TURN BEYOND SNUG TIGHT

BOLT LENGTHS OVER FOUR DIA. BUT NOT EXCEEDING EIGHT DIA.

1/2"	BOLTS 2.25 TO 4.0 INCH LENGTH	+1/2 TURN BEYOND SNUG TIGHT
5/8"	BOLTS 2.75 TO 5.0 INCH LENGTH	+1/2 TURN BEYOND SNUG TIGHT
3/4"	BOLTS 3.25 TO 6.0 INCH LENGTH	+1/2 TURN BEYOND SNUG TIGHT
7/8"	BOLTS 3.75 TO 7.0 INCH LENGTH	+1/2 TURN BEYOND SNUG TIGHT
1"	BOLTS 4.25 TO 8.0 INCH LENGTH	+1/2 TURN BEYOND SNUG TIGHT

4. ALL OTHER BOLTED CONNECTIONS SHALL BE BROUGHT TO A SNUG TIGHT CONDITION AS DEFINED IN SECTION 8.1 OF THE SPECIFICATION.

FOUNDATION NOTES

FOUNDATION GENERAL NOTES

1. FOUNDATION INSTALLATION SHALL BE SUPERVISED BY PERSONNEL KNOWLEDGEABLE AND EXPERIENCED WITH THE PROPOSED FOUNDATION TYPE. CONSTRUCTION SHALL BE IN ACCORDANCE WITH GENERALLY ACCEPTED PRACTICES AND IN A GOOD WORKMANLIKE MANNER.
2. CONTRACTOR TO VERIFY DIMENSIONS WITH ORIGINAL TOWER DRAWINGS. ETS SHALL BE NOTIFIED OF ANY DISCREPANCIES BETWEEN FIELD MEASURED DIMENSIONS AND ORIGINAL TOWER DRAWINGS.
3. FOUNDATION DESIGN MODIFICATIONS MAY BE REQUIRED IN THE EVENT THE DESIGN PARAMETERS ARE NOT APPLICABLE FOR THE SUBSURFACE CONDITIONS ENCOUNTERED DURING CONSTRUCTION.
4. FOR FOUNDATION TOLERANCES, SEE ORIGINAL TOWER DRAWINGS.
5. THE FOUNDATION MODIFICATION DESIGN IS IN ACCORDANCE WITH GENERALLY ACCEPTED PROFESSIONAL ENGINEERING PRINCIPLES AND PRACTICES WITHIN THE LIMITS OF SUBSURFACE DATA PROVIDED.
6. THE FOUNDATION DEPTH INDICATED IS BASED ON THE GRADE LINE DESCRIBED IN THE REFERENCE GEOTECHNICAL REPORT. FOUNDATION MODIFICATION MAY BE REQUIRED IN THE EVENT CUT OR FILL OPERATIONS HAVE TAKEN PLACE SUBSEQUENT TO THE GEOTECHNICAL INVESTIGATION.
7. THE FOUNDATION DESIGN ASSUMES THAT INSTALLATION METHODS WILL INCORPORATE THE PROCEDURES RECOMMENDED IN THIS REPORT.
8. THE FOUNDATION DESIGN ASSUMES FIELD INSPECTIONS WILL BE PERFORMED TO VERIFY THAT CONSTRUCTION MATERIALS, INSTALLATION METHODS, AND ASSUMED DESIGN PARAMETERS ARE ACCEPTABLE BASED ON THE CONDITIONS AT THE SITE.
9. THE FOUNDATION DESIGN ASSUMES NO CONSTRUCTION JOINTS. HOWEVER, CONSTRUCTION JOINTS SHALL BE PERMITTED UPON APPROVAL BY THE OWNER/ENGINEER.

EXCAVATION

1. WORK SHALL BE IN ACCORDANCE WITH LOCAL CODES AND SAFETY REGULATIONS PROCEDURES FOR THE PROTECTION OF EXCAVATIONS, EXISTING CONSTRUCTION, AND UTILITIES SHALL BE ESTABLISHED PRIOR TO BEGINNING WORK.
2. THE SIDES OF THE EXCAVATION SHALL BE ROUGH AND FREE OF CUTTINGS.
3. LOOSE MATERIAL TO BE REMOVED FROM THE BOTTOM OF EXCAVATION PRIOR TO CONCRETE PLACEMENT.

REINFORCING STEEL

1. THE REINFORCING STEEL SHALL CONFORM TO THE REQUIREMENTS OF ASTM A-615, GRADE 60. IT SHALL BE DEFORMED AND SPLICES SHALL NOT BE ALLOWED UNLESS OTHERWISE NOTED.
2. WELDING IS PROHIBITED ON REINFORCING STEEL AND EMBEDMENTS.
3. REINFORCING CAGES SHALL BE BRACED TO RETAIN PROPER DIMENSIONS DURING HANDLING AND THROUGHOUT PLACEMENT OF CONCRETE. WHEN TEMPORARY CASING IS UTILIZED, BRACING SHALL BE ADEQUATE TO RESIST FORCES OCCURRING FROM FLOWING CONCRETE DURING CASING EXCAVATION.
4. SPACERS SHALL BE ATTACHED INTERMITTENTLY THROUGHOUT THE ENTIRE LENGTH OF TIEBACK REINFORCING TO INSURE CONCENTRIC PLACEMENT OF CASING IN EXCAVATIONS.
5. MINIMUM CONCRETE COVER FOR REINFORCEMENT SHALL BE 3" UNLESS OTHERWISE NOTED. APPROVED SPACERS SHALL BE USED TO INSURE A 3" MINIMUM COVER FOR REINFORCEMENT.
6. THE CONCRETE COVER FROM THE TOP OF THE FOUNDATION TO THE ENDS OF THE VERTICAL REINFORCEMENT SHALL NOT BE LESS THAN 3".

FOUNDATION NOTES (CONTINUED)

CONCRETE

1. WORK SHALL BE IN ACCORDANCE WITH THE ACI 318-14, "BUILDING CODE REQUIREMENTS FOR STRUCTURAL CONCRETE AND COMMENTARY".
2. THE CONCRETE SHALL DEVELOP A MINIMUM COMPRESSIVE STRENGTH OF 3000-PSI IN 28 DAYS.
3. ANY CONCRETE EXPOSED TO WEATHER SHALL BE AIR-ENTRAINED AS REQUIRED BY ACI 318-14.
4. PROPORTIONS OF CONCRETE MATERIALS SHALL BE SUITABLE FOR THE INSTALLATION METHOD UTILIZED AND SHALL RESULT IN DURABLE CONCRETE FOR RESISTANCE TO LOCAL ANTICIPATED AGGRESSIVE ACTIONS. THE DURABILITY REQUIREMENTS OF ACI 318-14 SHALL BE SATISFIED BASED ON THE CONDITIONS EXPECTED AT THE SITE.
5. CONCRETE SHALL BE PLACED IN A MANNER THAT WILL PREVENT SEGREGATION OF CONCRETE MATERIALS, INFILTRATION OF WATER OR SOIL, AND OTHER OCCURRENCES THAT MAY DECREASE THE STRENGTH OR DURABILITY OF THE FOUNDATION.
6. FREE FALL CONCRETE MAY BE USED PROVIDED FALL IS VERTICAL DOWN WITHOUT HITTING THE SIDES OF THE EXCAVATION, FORMWORK, REINFORCING BARS, FORM TIES, CAGE BRACING, OR OTHER OBSTRUCTIONS. UNDER NO CIRCUMSTANCES SHALL CONCRETE FALL THROUGH WATER.
7. THE MAXIMUM SIZE OF THE AGGREGATE SHALL NOT EXCEED A SIZE SUITABLE FOR THE INSTALLATION METHODS UTILIZED OR 2/3-CLEAR DISTANCE BEHIND OR BETWEEN REINFORCING. THE MAXIMUM SIZE MAY BE INCREASED TO 2/3-CLEAR DISTANCE PROVIDED WORKABILITY AND METHODS OF CONSOLIDATION SUCH AS VIBRATING WILL PREVENT HONEYCOMBS AND VOIDS.

FINISHING

1. THE TOP OF THE FOUNDATION SHALL BE SLOPED TO DRAIN WITH A FLOATED FINISH.
2. THE EXPOSED EDGES OF THE CONCRETE SHALL BE CHAMFERED 1" X 1".

EPOXY NOTES

1. EPOXY AGENTS SHOULD BE ALLOWED TO CURE ACCORDING TO MANUFACTURERS RECOMMENDATIONS.
2. ALL HARDWARE ASSEMBLY AND MANUFACTURER'S INSTRUCTIONS SHALL BE FOLLOWED; ANY CONTRADICTION BETWEEN THE MANUFACTURER'S RECOMMENDATIONS AND THESE DRAWINGS ARE TO BE BROUGHT IMMEDIATELY TO THE ATTENTION OF THE ENGINEER AND OWNER.
3. ANY CONTRACTOR INSTALLING ADHESIVE ANCHORING SYSTEMS SHALL BE TRAINED, IN PERSON BY A MANUFACTURER'S REPRESENTATIVE, ON THE PROPER INSTALLATION TECHNIQUES. THIS TRAINING SHALL INCLUDE PROPER DRILLING, HOLE CLEANING, AND INSTALLATION METHODS FOR THE ADHESIVE ANCHORING SYSTEM AND CONSTRUCTION CONDITIONS ON THIS PROJECT. ALL TRAINING TO BE CONDUCTED PRIOR TO CREWS STEPPING ON SITE. IT IS THE RESPONSIBILITY OF THE CONTRACTOR TO CONTACT MANUFACTURER REPRESENTATIVE TO SET UP TRAINING. ETS IS NOT RESPONSIBLE FOR ANY COST OCCURRED FOR OR DURING ADHESIVE ANCHORING SYSTEM TRAINING.

SOIL COMPACTION

1. SUBGRADE PREPARATION
   - 1.1. SHAPE TOP OF SUBGRADE TO THE LINES AND GRADES SHOWN ON THE DRAWINGS.
   - 1.2. MAINTAIN TOP OF SUBGRADE IN A FREE-DRAINING CONDITION.
   - 1.3. DO NOT STOCKPILE MATERIALS ON TOP OF SUBGRADE UNLESS AUTHORIZED BY CONSTRUCTION MANAGER.
   - 1.4. FOR SUBGRADES CONSISTING OF IN-PLACE NATIVE SOILS, SOILS SHALL BE FREE OF CUTTING AND OTHER LOOSE MATERIAL AND SHALL MEET THE MINIMUM BEARING CAPACITY REQUIREMENTS NOTES UNDER SOIL STRENGTH
   - 1.5. FOR SUBGRADES CONSISTING OF PLACED STRUCTURAL FILL, STRUCTURAL FILL SHOULD BE PLACED IN 6 INCH LIFTS AND COMPACTED TO A MINIMUM OF 95 PERCENT OF THE MAXIMUM DRY DENSITY AS OBTAINED BY THE STANDARD PROCTOR METHOD
   - 1.6. CONSTRUCT TOP OF SUBGRADE WITHIN ONE INCH OF ESTABLISHED GRADE AND CROSS-SECTION.

SOIL STRENGTH

1. FOUNDATION DESIGN IS BASED ON A 2000 PSF SOIL BEARING CAPACITY. IF OTHER CONDITIONS EXIST, FOUNDATION SHALL BE REDESIGNED. CONTRACTOR SHALL HAVE SOIL BEARING CAPACITY VERIFIED BY A LICENSED PROFESSIONAL GEOTECHNICAL ENGINEER PRIOR TO INITIATION OF CONSTRUCTION ACTIVITIES.

WELDING NOTES

1. ALL WELDING SHALL BE IN ACCORDANCE WITH THE AWS D1.1/D1.1M: 2015 "STRUCTURAL WELDING CODE-STEEL".
2. ALL WELDING SHALL BE PERFORMED BY AWS CERTIFIED WELDERS.
3. CONTRACTOR SHALL RETAIN AN AWS CERTIFIED WELD INSPECTOR TO PERFORM VISUAL INSPECTIONS ON FIELD WELDS. A LETTER AND REPORT SHALL BE ISSUED TO THE CONTRACTOR. CONTRACTOR SHALL SUBMIT LETTER AND REPORT TO TOWER OWNER.
4. GRIND THE SURFACE ADJACENT TO THE WELD FOR A DISTANCE OF 2" MINIMUM ALL AROUND. GRIND THE SURFACE OF THE ROD TO BE INSTALLED FOR A DISTANCE OF 2" MINIMUM ALL AROUND THE AREA TO BE WELDED. ENSURE BOTH AREAS ARE 100% FREE OF ALL GALVANIZING. SURFACES TO BE WELDED SHALL BE FREE FROM SCALE, SLAG, RUST, MOISTURE, GREASE OR ANY OTHER FOREIGN MATERIAL THAT WOULD PREVENT PROPER WELDING.
5. DO NOT WELD IF THE TEMPERATURE OF THE STEEL IN THE VICINITY OF THE WELD AREA IS BELOW 0°F. WHEN THE TEMPERATURE IS BETWEEN 0°F AND 32°F, PREHEAT AND MAINTAIN THE STEEL IN THE VICINITY OF THE WELD AREA AT 70°F DURING THE WELDING PROCESS.
6. DO NOT WELD ON WET OR FROST-COVERED SURFACES & PROVIDE ADEQUATE PROTECTION FROM HIGH WINDS.
7. FOR ALL WELDING, USE E70XX ELECTRODES.
8. AFTER FINAL INSPECTION, THE AREA OF THE WELDS, THE INSTALLATION AND ALL SURFACES DAMAGED BY WELDING OR GRINDING SHALL RECEIVE A COLD-GALVANIZED COATING. THIS COATING SHALL BE APPLIED BY BRUSH. THE GALVANIZING COMPOUND SHALL CONTAIN A MINIMUM OF 95% ± PURE ZINC. THE FINISHED COATING SHALL BE A MINIMUM THICKNESS OF 3 MILS.

PREPARED BY:

ENGINEERED TOWER SOLUTIONS
3227 WELLINGTON COURT
RALEIGH, NC 27615
919-782-2710
www.ets-pllc.com

PREPARED FOR:

DUKE ENERGY.

SUBSTATION NAME:
SUMTER ALICE DRIVE 230 SUB

SUBSTATION TRANSMISSION NUMBER:
T3966

SUBSTATION ADDRESS:
1242 ALICE DRIVE
SUMTER, SC 29150

LATITUDE/LONGITUDE:
33.9528533°, -080.3908081°

SEAL:

SOUTH CAROLINA — ENGINEERED TOWER SOLUTIONS, PLLC — NO 4834 — CERTIFICATE OF AUTHORIZATION
07/18/2025

COA:

CHRISTOPHER G. PLY — No. 22980
07/18/2025

REV	DATE	DETAILS
0	7/17/2025	CONSTRUCTION
1	07/18/2025	CONSTRUCTION
2		
3		

DRAWN BY: HM | CHECKED BY: AS

SHEET TITLE:

GENERAL NOTES II

SHEET # GN-2 | CURRENT REV # 1 | ETS # 24131424

ABBREVIATIONS

ABC	AGGREGATE BASE COURSE
ABS	AIR BREAK SWITCH
A.C.	ASBESTOS CEMENT
A/C	AIR CONDITIONING
A.D.	AREA DRAIN
A.F.F.	ABOVE FINISHED FLOOR
ALT.	ALTERNATE
ALUM.	ALUMINUM
AMP.	AMPERES
A.O.	ACCESS OPENING
APPROX.	APPROXIMATELY
ARCH.	ARCHITECTURAL
ASPH.	ASPHALT
A.T.P.	ANTI-TERRORISM FORCE PROTECTION
A.W.W.A.	AMERICAN WATER WORKS ASSOCIATION
BLDG.	BUILDING
BM.	BENCH MARK
BOC	BACK OF CURB
BOL	BOLLARD
BRG.	BEARING
BVC	BEGIN VERTICAL CURVE
BVCE	BEGIN VERTICAL CURVE ELEVATION
BVCS	BEGIN VERTICAL CURVE STATION
C&G	CURB AND GUTTER
CATV	CABLE TELEVISION
CAP.	CAPACITY
C.B.	CATCH BASIN
CBL	CABLE
CEM.	CEMENT
CER.	CERAMIC
C.F.M.	CUBIC FEET/MINUTE
C.F.S.	CUBIC FEET/SECOND
C.I.	CURB INLET
C.I.P.	CAST IRON PIPE
CIRC.	CIRCULATING
C.A.	CONSTRUCTION JOINT/CONTRACTION JOINT
C.L.	CENTER LINE
C.A.	CONCRETE MONUMENT
C.M.P.	CONCRETE METAL PIPE
C.M.U.	CONCRETE MASONRY UNIT
C.O.	CLEAN OUT
COL.	COLUMN
CONC.	CONCRETE
COND.	CONDENSATE
CONN.	CONNECTION
CONST.	CONSTRUCTION
CONT.	CONTINUOUS
COR	CONTRACTING OFFICERS REPRESENTATIVE
C.TO C.	CENTER TO CENTER
C.Y.	CUBIC YARD
DET.	DETAIL
DI	DROP INLET
DIA.	DIAMETER
DIFF.	DIFFUSER
DIM.	DIMENSION
D.I.P.	DUCTILE IRON PIPE
DISC.	DISCONNECT
D.J.	DUMMY JOINT
DN.	DOWN
DR.	DRAIN
D.S.	DOWN SPOUT
DW	DOMESTIC WATER
DWG.(S)	DRAWING(S)
EA.	EACH
E.F	EXHAUST FAN
EG.	EXISTING GRADE
E.I.P.	EXISTING IRON PIPE
E.J.	EXPANSION JOINT
ELEC.	ELECTRIC
EL.	ELEVATION
E.M.	ELECTRIC METER
EOP	EDGE OF PAVEMENT
EQUIP.	EQUIPMENT
EVC	END VERTICAL CURVE
EVCE	END VERTICAL CURVE ELEVATION
EVCS	END VERTICAL CURVE STATION
EXH.	EXHAUST
EXP.JT.	EXPANSION JOINT
EXT.	EXTERIOR
EX./EXIST.	EXISTING
FC	FACE OF CURB
F.D.	FLOOR DRAIN
F.D.C.	FIRE DEPARTMENT CONNECTION
F.E.S.	FLARED END SECTION
F.F.E.	FINISHED FLOOR ELEVATION
FG	FINISHED GRADE
FH	FIRE HYDRANT
FIN.	FINISH FLOOR
FM	FORCE MAIN
FOC	FACE OF CURB
FT.	FOOT, FEET
FTG.	FOOTING
GA	GAGE
GAL.	GALLON
GALV.	GALVANIZED
GC	GENERAL CONTRACTOR
G.F.E.	GOVERNMENT FURNISHED EQUIPMENT
GIS	GEOGRAPHIC INFORMATION SYSTEM
GL	GAS LINE
GM	GAS METER
G.P.H.	GALLONS/HOUR
G.P.M.	GALLONS/MINUTE
GND.	GROUND
GOV'T	GOVERNMENT
GV	GATE VALVE
GW	GUY WIRE
HC	HANDICAP
HCP	HANDICAP PARKING
HCR	HANDICAP RAMP
HDW	HEADWALL
HP	HIGH POINT
HSS	HIGH STRENGTH STEEL
HT	HEIGHT
HYD	HYDRANT
ID.	INSIDE DIAMETER
INTX.	INTERSECTION
INV.	INVERT
ISL	ISLAND
ITL.	INDEPENDENT TESTING LABORATORY
J.B.	JUNCTION BOX
JCT.	JUNCTION
JSOC	JOINT SPECIAL OPERATIONS COMMAND
JT.	JOINT
K	K VALVE
KVA	KILOVOLT AMPERE
KW	KILOWATT
L	LENGTH
LF	LINEAR FEET
LGT	LIGHT
LP	LIGHT POLE
LT	LEFT
MAX	MAXIMUM
MED	MEDIAN
MH	MANHOLE
MIN	MINIMUM
MJ	MECHANICAL JOINT
MON	MONUMENT
MTL	METAL
MW	MONITOR WELL / MICROWAVE
M.U.T.C.D	MANUAL ON UNIFORM TRAFFIC CONTROL DEVICES
N/A	NOT APPLICABLE
NAD 27	NORTH AMERICAN DATUM 1927
NAD 83	NORTH AMERICAN DATUM 1983
NBL	NORTH BOUND LINE
NC	NORMAL CROWN
NEMA	NATIONAL ELECTRICAL MANUFACTURES ASSOCIATION
NIC	NOT IN CONTRACT
NIP	NEW IRON PIPE
N.T.S.	NOT TO SCALE
O.U.	ON CENTER
O.V.	OUTSIDE DIAMETER
OH	OVERHEAD
OHE	OVERHEAD ELECTRIC
ONUS.	OLD NORTH UTILITY SERVICE
OVH	OVERHANG
P/A	PARKING AREA
PC	POINT OF CURVATURE
PCC	POINT OF COMPOUND CURVATURE
PED	PEDESTAL
PER.	PERIMETER
PGL	PROPOSED GRADE LINE
PI	POINT OF INTERSECTION
PINC	POINT OF INTERSECTION ON CURVE
PIV	POST INDICATOR VALVE
PIV ELEV	POINT OF VERTICAL INTERSECTION ELEVATION
PLT	PLATE
PSF	POUNDS PER SQUARE FOOT
PSF	POUNDS/SQUARE FOOT
PSI	POUNDS/SQUARE INCH
PIV STA	POINT OF VERTICAL INTERSECTION STATION
PT	POINT
PVMT	PAVEMENT
RAD.	RADIUS
RCP	REINFORCED CONCRETE PIPE
REINF.	REINFORCING
REQ.	REQUIRED
REV	REVISED
R.P.Z.	REDUCED PRESSURE ZONE
RT	RIGHT
R/W	RIGHT OF WAY
RWM	RIGHT OF WAY MONUMENT
SAN	SANITARY SEWER
SB	SOIL BORING
SCH	SCHEDULE
SET	SETBACK
SF	SQUARE FEET
SHT	SHEET
SIA	SIAMESE CONNECTION
SIG	SIGNAL
SOTF	SECURITY OPERATIONS TRAINING FACILITY
SP	SIGNAL POLE
SPECS	SPECIFICATIONS
SQFT	SQUARE FEET
SR	STATE ROAD
SS	SANITARY SEWER
STA.	STATION
STD.	STANDARD
STM	STORM
STL	STEEL
SW	SIDEWALK
SWM.	STORMWATER MANAGEMENT
T	TANGENT
TBM	TEMPORARY BENCHMARK
TERR	TERRA COTTA PIPE
TEL	TELEPHONE
TOC	TOP OF CURB
TOB	TOP OF BANK
TOS	TOP OF SLOPE
TOW	TOP OF WALL
TP	TELEPHONE POLE
TRANS	TRANSFORMER
TYP.	TYPICAL
U/C	UNDER CONSTRUCTION
U/G	UNDERGROUND
UNO	UNLESS NOTED OTHERWISE
UP	UTILITY POLE
VC	VERTICAL CURVE
VCP	VITRIFIED CLAY PIPE
VIF	VERIFY IN FIELD
WL	WATER LINE
WM	WATER METER
WSEL	WATER SURFACE ELEVATION
WV	WATER VALVE
WTR	WATER
WWF	WIRE WELD FABRIC

LINETYPES

	PARENT PROPERTY BOUNDARY
	ADJACENT PROPERTY BOUNDARY
	EASEMENT
	LEASE AREA
R/W	RIGHT OF WAY
SF	SILT FENCE
X	CHAIN-LINK FENCE
UGW	UNDERGROUND WATER
UGP	UNDERGROUND POWER
OHP	OVERHEAD POWER
ACP	ALTERNATING CURRENT POWER
DCP	DIRECT CURRENT POWER
FO/DC	FIBER/DC POWER COMPOSITE CABLE
HYBRID	HYBRID CABLE
UGF	UNDERGROUND FIBER
OHF	OVERHEAD FIBER
MMF	MULTI-MODE FIBER
SMF	SINGLE-MODE FIBER
SM6	FIBER TRUNK - 6 STRAND
SM12	FIBER TRUNK - 12 STRAND
SM24	FIBER TRUNK - 24 STRAND
SM48	FIBER TRUNK - 48 STRAND
SM96	FIBER TRUNK - 96 STRAND
SM144	FIBER TRUNK - 144 STRAND
SM288	FIBER TRUNK - 288 STRAND
GND	GROUND WIRE
GAS	GAS LINE
ETH	ETHERNET CABLE
CAT6	CAT6 CABLE
CAT5	CAT5 CABLE
ALM	ALARM CABLE
C	CONDUIT
COAX	COAX FEEDLINE
TFT-402	COAX FEEDLINE / JUMPER - TFT-402
PTS1-50	COAX FEEDLINE / JUMPER - PTS1-50
LMR-240	COAX FEEDLINE / JUMPER - LMR-240
LDF4-50	COAX FEEDLINE / JUMPER - LDF4-50
LDF1-50	COAX FEEDLINE / JUMPER - LDF1-50
HL4RPV	COAX FEEDLINE / JUMPER - HL4RPV
FSJ4-50	COAX FEEDLINE / JUMPER - FSJ4-50
FSJ1-50	COAX FEEDLINE / JUMPER - FSJ1-50
AL4RPV	COAX FEEDLINE / JUMPER - AL4RPV

PREPARED BY:

ENGINEERED TOWER SOLUTIONS

3227 WELLINGTON COURT
RALEIGH, NC 27615
919-782-2710
www.ets-pllc.com

PREPARED FOR:

DUKE ENERGY.

SUBSTATION NAME:

SUMTER ALICE DRIVE 230 SUB

SUBSTATION TRANSMISSION NUMBER:

T3966

SUBSTATION ADDRESS:
1242 ALICE DRIVE
SUMTER, SC 29150

LATITUDE/LONGITUDE:
33.9528533°, -080.3900981°

SEAL:

SOUTH CAROLINA
ENGINEERED TOWER SOLUTIONS, PLLC
NO 4634
CERTIFICATE OF AUTHORIZATION

07/18/2025

COA:

SOUTH CAROLINA
No. 22960
CHRISTOPHER G. PLY

07/18/2025

REV	DATE	DETAILS
0	7/17/2025	CONSTRUCTION
1	07/18/2025	CONSTRUCTION
2		
3		

DRAWN BY: HM | CHECKED BY: AS

SHEET TITLE:

GENERAL NOTES III

SHEET # **GN-3** | CURRENT REV # 1 | ETS # 24131424

SITE PLAN DATA TABLE

OWNER OF RECORD	CAROLINA POWER & LIGHT CO DUKE ENERGY CENTER 550 S TRYON STREET CHARLOTTE, NC 28202	
APPLICANT	DUKE ENERGY PROGRESS INC 150 FAYETTEVILLE STREET, BOX 1001 HICKORY, NC 28601	
PRIMARY CONTACT S	SEE T-1	
PROJECT ADDRESS	1242 ALICE DRIVE SUMTER, SC 29150	
TAX MAP IDENTIFICATION NUMBER	203-00-05-005	
WITHIN SUMTER CITY LIMITS	YES	
PROPOSED USE	120' UTILITY POLE FOR DUKE ENERGY INTERNAL USE FOR SUBSTATION REMOTE ACCESS	
ZONING DISTRICT	R-15	
MINIMUM DEVELOPMENT REQUIREMENTS	MINIMUM LOT AREA PER INDIVIDUAL UNIT	N/A
	MINIMUM LOT WIDTH	100 FT
	MINIMUM LOT DEPTH	120 FT
	MINIMUM YARDS PER STRUCTURE	
	FRONT	35 FT
	SIDE	50 FT
	REAR	50 FT
	MAXIMUM IMPERVIOUS SURFACE PERCENTAGE	0.4
	MAXIMUM DENSITY (UNITS PER GROSS ACRE)	N/A
	MAXIMUM HEIGHT OF BUILDINGS	45 FT
FEMA FLOODPLAIN INSURANCE, MAP INFORMATION	MAP NUMBER 45085C0206E EFFECTIVE ON 10/27/2022	
SIZE OF PARCEL	15.4 ACRES	
SIZE OF SITE PLAN	0.6893	
PERCENTAGE OF PARCEL UNDEVELOPED	0.044	
EXISTING BUILDINGS	N/A	

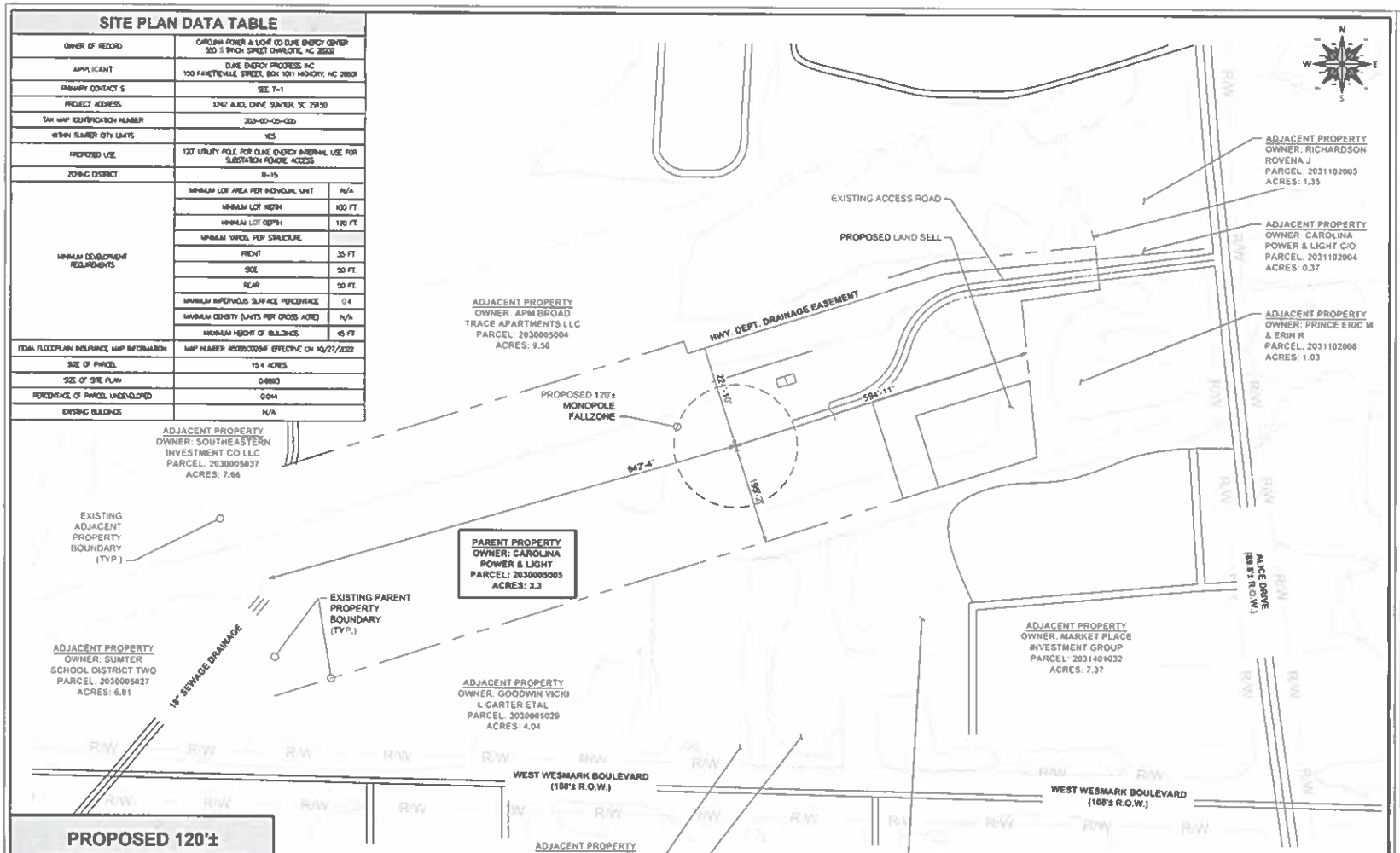

PROPOSED 120'± MONOPOLE SETBACKS

PROPERTY BOUNDARY LINE	DISTANCE
NORTH	224'-10"±
EAST	594'-11"±
SOUTH	195'-2"±
WEST	942'-4"±

NOTES

1. SITE PLAN BASED ON SURVEY COMPLETED BY JMT DATED 02/24/2025.
2. ALL INFORMATION SHOWN ON THIS PLAN IS FOR REFERENCE ONLY. CONTRACTOR TO VERIFY THAT ALL EXISTING INFORMATION IS AS INDICATED ON THE SITE PLAN, AND NOTIFY THE CONSTRUCTION MANAGER OF ANY DISCREPANCIES. ALL PERTINENT ITEMS AND DIMENSIONS ARE RECOMMENDED TO BE VERIFIED IN THE FIELD. ENGINEERED TOWER SOLUTIONS, PLLC IS NOT LIABLE AND DOES NOT ASSUME RESPONSIBILITY FOR THIS CONTENT.

OVERALL PROPERTY PLAN

1" = 200'-0"

PREPARED BY:
ENGINEERED TOWER SOLUTIONS
3227 WELLINGTON COURT
RALEIGH, NC 27615
919-782-2710
www.ets-pllc.com

PREPARED FOR:
DUKE ENERGY.

SUBSTATION NAME
SUMTER ALICE DRIVE 230 SUB

SUBSTATION TRANSMISSION NUMBER
T3966

SUBSTATION ADDRESS:
1242 ALICE DRIVE
SUMTER, SC 29150

LATITUDE/LONGITUDE:
33.9528533°, -080.3906981°

SEAL
SOUTH CAROLINA CERTIFICATE OF AUTHORIZATION
ENGINEERED TOWER SOLUTIONS, PLLC
NO. 4834
07/18/2025

COA:
SOUTH CAROLINA PROFESSIONAL ENGINEER
No. 22980
CHRISTOPHER G. PLY
07/18/2025

REV	DATE	DETAILS
0	7/17/2025	CONSTRUCTION
1	07/18/2025	CONSTRUCTION
2		
3		

DRAWN BY: HM | CHECKED BY: AS

SHEET TITLE
OVERALL PROPERTY PLAN

SHEET # C-1.0 | CURRENT REV # 1 | ETS # 24131424

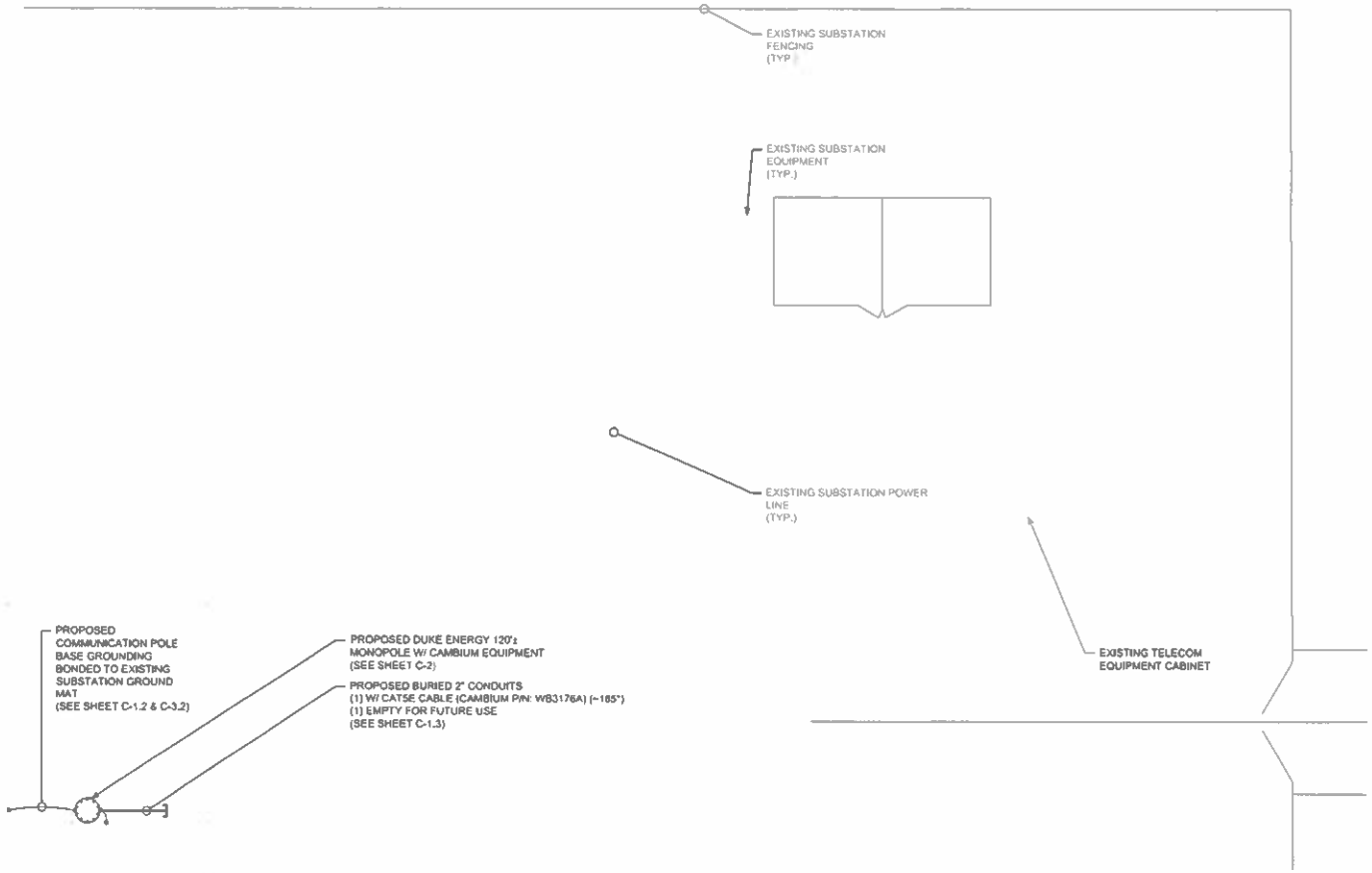

SUBSTATION COMPOUND PLAN

1" = 20'-0"

PREPARED BY:

ENGINEERED TOWER SOLUTIONS

3227 WELLINGTON COURT
RALEIGH, NC 27615
919-782-2710
www.ets-pllc.com

PREPARED FOR:

DUKE ENERGY.

SUBSTATION NAME:

SUMTER ALICE DRIVE 230 SUB

SUBSTATION TRANSMISSION NUMBER:

T3966

SUBSTATION ADDRESS:
1242 ALICE DRIVE
SUMTER, SC 29150

LATITUDE/LONGITUDE:
33.9528533° -080.3906661°

SEAL:

SOUTH CAROLINA
ENGINEERED TOWER SOLUTIONS, PLLC
NO. 4634
CERTIFICATE OF AUTHORIZATION
07/18/2025

COA:

SOUTH CAROLINA
No. 22980
CHRISTOPHER G. PLY
07/18/2025

REV	DATE	DETAILS
0	7/17/2025	CONSTRUCTION
1	07/18/2025	CONSTRUCTION
2		
3		

DRAWN BY: HM | CHECKED BY: AS

SHEET TITLE

SUBSTATION COMPOUND PLAN

SHEET # C-1.1 | CURRENT REV # 1 | ETS #: 24131424

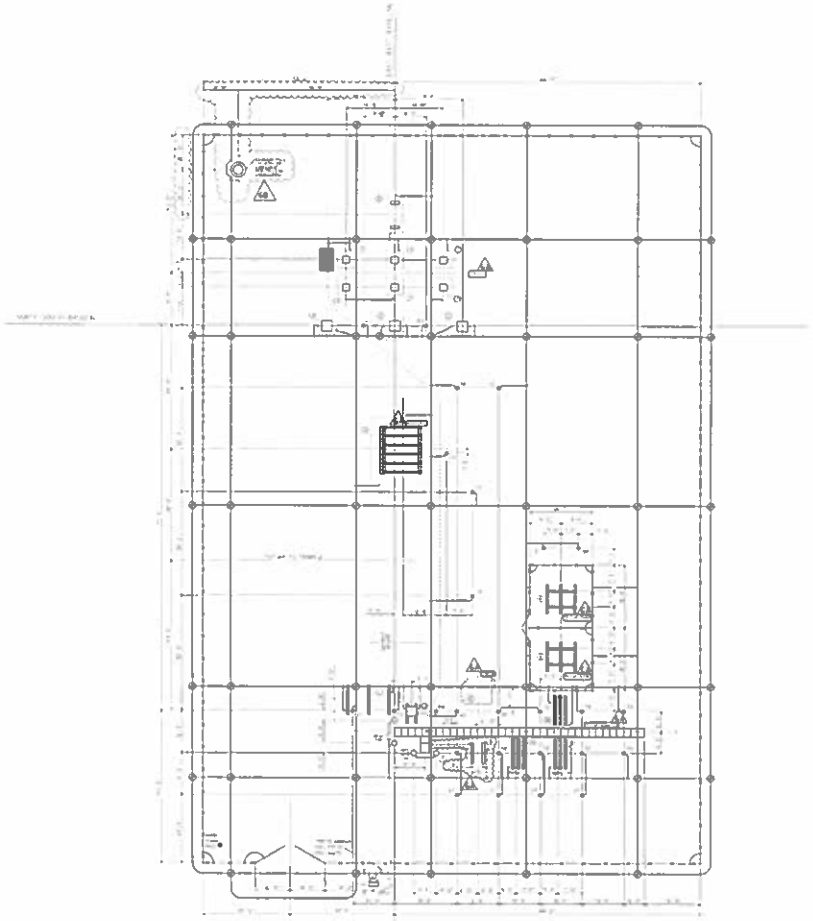

NOTES

LEGEND

DUKE ENERGY. PROGRESS

SUMTER ALICE DRIVE 230 kV SUBSTATION FOUNDATION & GROUNDING PLAN

SUMTER, SOUTH CAROLINA

NO	DATE	REVISION	BY	CK	APP

TRANSMISSION GROUNDING PLAN

N.T.S.

PREPARED BY:

ENGINEERED TOWER SOLUTIONS

3227 WELLINGTON COURT
RALEIGH, NC 27615
919-782-2710
www.ets-pllc.com

PREPARED FOR:

DUKE ENERGY.

SUBSTATION NAME:

SUMTER ALICE DRIVE 230 SUB

SUBSTATION TRANSMISSION NUMBER:

T3966

SUBSTATION ADDRESS:
1242 ALICE DRIVE
SUMTER, SC 29150

LATITUDE/LONGITUDE:
33.9528533°, -080.3909961°

SEAL:

SOUTH CAROLINA
ENGINEERED TOWER SOLUTIONS, PLLC
NO 4634
CERTIFICATE OF AUTHORIZATION
07/18/2025

COA:

SOUTH CAROLINA
No. 22960
CHRISTOPHER G. PLY
07/18/2025

REV	DATE	DETAILS
0	7/17/2025	CONSTRUCTION
1	07/18/2025	CONSTRUCTION
2		
3		

DRAWN BY: HM | CHECKED BY: AS

SHEET TITLE

TRANSMISSION GROUNDING PLAN

SHEET # C-1.2 | CURRENT REV #: 1
ETS # 24131424

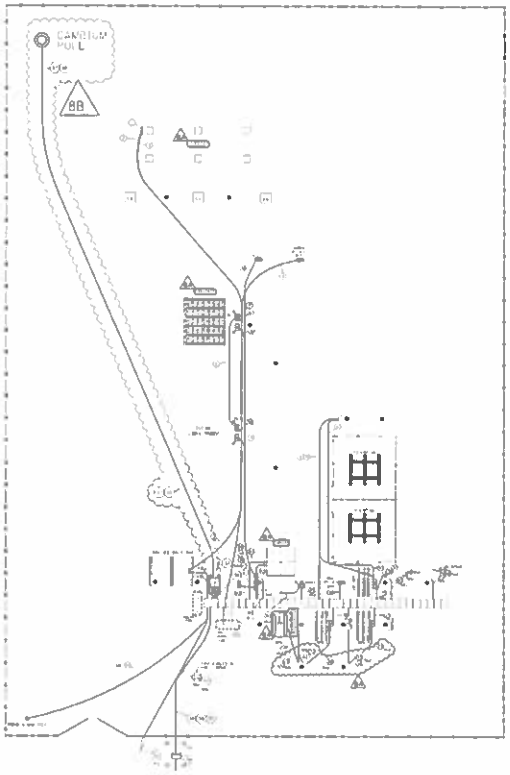

#	DESCRIPTION & FUNCTION	SIZE	LENTH	SIZE	LENGTH	REMARKS
67	CAMBIUM POLE TO TEC	2" PVC	165'	CATSE	300'	CABLE LENGTH INCLUDES POLE HEIGHT
68	CAMBIUM POLE TO TEC	2" PVC	165'	--	--	SPARE

TRANSMISSION CONDUIT PLAN

N.T.S.

PREPARED BY:

ENGINEERED TOWER SOLUTIONS

3227 WELLINGTON COURT
RALEIGH, NC 27615
919-782-2710
www.ets-pllc.com

PREPARED FOR:

DUKE ENERGY.

SUBSTATION NAME:

SUMTER ALICE DRIVE 230 SUB

SUBSTATION TRANSMISSION NUMBER:

T3966

SUBSTATION ADDRESS:
1242 ALICE DRIVE
SUMTER, SC 29150

LATITUDE/LONGITUDE:
33.9528533°, -080.3906861°

SEAL:

SOUTH CAROLINA
ENGINEERED TOWER SOLUTIONS, PLLC
NO 4634
CERTIFICATE OF AUTHORIZATION
07/18/2025

COA:

No. 22980
CHRISTOPHER G. PLY
07/18/2025

REV	DATE	DETAILS
0	7/17/2025	CONSTRUCTION
1	07/18/2025	CONSTRUCTION
2		
3		

DRAWN BY: HM | CHECKED BY: AS

SHEET TITLE:

TRANSMISSION CONDUIT PLAN

SHEET # C-1.3 | CURRENT REV #: 1 | ETS # 24131424

NOTES

1. CONTRACTOR TO REFER TO MOST RECENT TOWER ANALYSIS, COMPLETED BY ENGINEERED TOWER SOLUTIONS, PRIOR TO INSTALLATION.
2. COMMUNICATION POLE TO BE A GALVANIZED STEEL COLOR TO BLEND IN WITH EXISTING TRANSMISSION LINE EQUIPMENT.
3. COMMUNICATION POLE INTENDED FOR DUKE ENERGY EQUIPMENT ONLY. NO TENANTS ARE PERMITTED TO CO-LOCATE ONTO COMMUNICATION POLE.

COMMUNICATION POLE ELEVATION

1/16" = 1'-0"

SIZE (FT)	TYPE	MANUFACTURER	PART #	ELEVATION (FT)	AZIMUTH	MOUNT
6'	ANTENNA	RADIOWAVES	HPD6-5.2	117'-0"	134.20°	SITE PRO 1 DCH8 CHAIN MOUNT
5.3"x10.3"x3.3"	ODU	CAMBIUM NETWORKS	PMP450i NON-INTEGRATED I	117'-0"	--	
96.0"x14.6"x8.7"	LTE ANTENNA (FUTURE)	JMA	(9) X7CQAP-86-880-VR5	90°	--	PV-LPPGS-12M-HR2 -AP19-AT (12.5 FT PLATFORM MOUNT)
27.20"x12.05"x7.0"	RRUS (FUTURE)	ERICSSON	(9) RRUS 32	90°	--	
31.41"x18.28"x9.66"	SURGE SUPPRESSOR (FUTURE)	RAYCAP	(3) DC6-48-60-18-8C	90°	--	

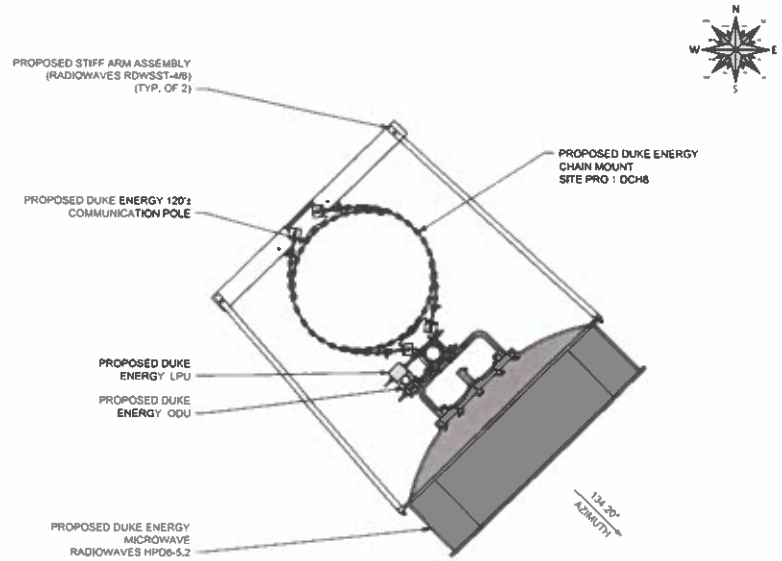

ANTENNA PLAN

3/8" = 1'-0"

PREPARED BY:

ENGINEERED TOWER SOLUTIONS
3227 WELLINGTON COURT
RALEIGH, NC 27615
919-782-2710
www.ets-plc.com

PREPARED FOR:

DUKE ENERGY.

SUBSTATION NAME

SUMTER ALICE DRIVE 230 SUB

SUBSTATION TRANSMISSION NUMBER:

T3966

SUBSTATION ADDRESS:
1242 ALICE DRIVE
SUMTER, SC 29150

LATITUDE/LONGITUDE:
33.9528533°, -080.3906961°

SEAL:

SOUTH CAROLINA
ENGINEERED TOWER SOLUTIONS, PLLC
NO. 4634
CERTIFICATE OF AUTHORIZATION
07/18/2025

COA:

SOUTH CAROLINA
No. 22960
CHRISTOPHER G. PLY
07/18/2025

REV	DATE	DETAILS
0	7/17/2025	CONSTRUCTION
1	07/18/2025	CONSTRUCTION
2		
3		

DRAWN BY: HM | CHECKED BY: AS

SHEET TITLE:

COMMUNICATION POLE ELEVATION & ANTENNA PLAN

SHEET # C-2 | CURRENT REV # 1 | ETS # 24131424

RADIOWAVES - HPD6-5.2

DIAMETER	WEIGHT	ANTENNA CONNECTOR	FREQUENCY
6'-0"	251 LBS	N-TYPE FEMALE	5.25 - 5.85 GHz

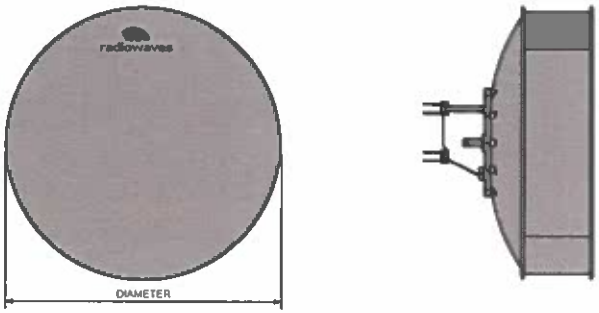

ANTENNA DETAIL

N.T.S.

CAMBIUM NETWORKS - PMP 450i

HEIGHT	WIDTH	DEPTH	WEIGHT	ANTENNA CONNECTOR	FREQUENCY
10.3"	5.3"	3.3"	4.5 LBS	(2) N-TYPE FEMALE	3 GHz: 3300 - 3900 MHz 5 GHz: 4900 - 5925 MHz

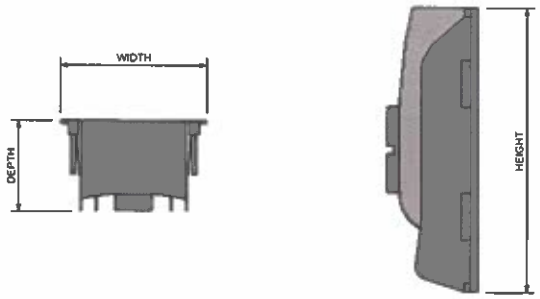

ODU DETAIL

N.T.S.

VALMONT - TCHM1

- TAPER ADJUSTABLE CHAIN MOUNT
- FITS POLYGON OR ROUND POLES
- ALLOWS FOR UP TO 5° OF TAPER IN 3/4° INCREMENTS
- INCLUDES U-BOLTS FOR MOUNTING 2-3/8" OR 4-1/2" OD PIPES
- MOUNTING PIPE ORDERED SEPARATELY

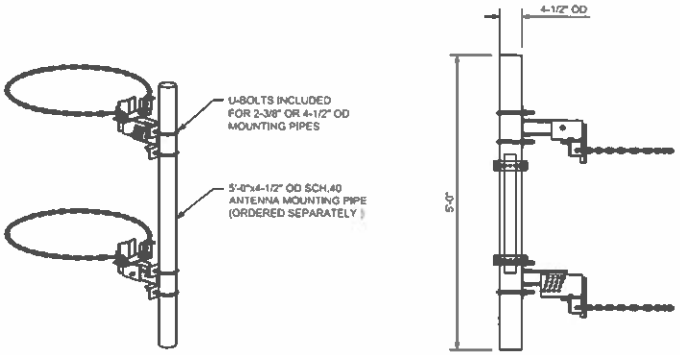

CHAIN MOUNT DETAIL

N.T.S.

ADAPTER CLAMP SET- ANDREW - AD-P60-SCP

- FITS PIPES 4-1/2" TO 12"
- INCLUDES (4) 1/2"x4" THREADED RODS / HARDWARE
- INCLUDES (4) 5/8"x8" THREADED RODS / HARDWARE
- ODU MOUNTING PIPE ORDERED SEPARATELY

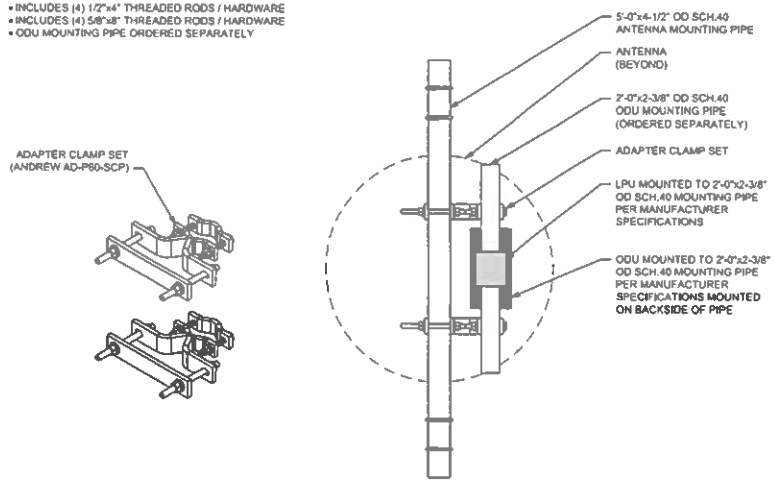

ODU MOUNTING DETAIL

N.T.S.

PREPARED BY:

ENGINEERED TOWER SOLUTIONS

3227 WELLINGTON COURT
RALEIGH, NC 27615
919-782-2710
www.ets-pllc.com

PREPARED FOR:

DUKE ENERGY.

SUBSTATION NAME:

SUMTER ALICE DRIVE 230 SUB

SUBSTATION TRANSMISSION NUMBER:

T3966

SUBSTATION ADDRESS:
1242 ALICE DRIVE
SUMTER, SC 29150

LATITUDE/LONGITUDE:
33.9528533°, -080.3908861°

SEAL:

SOUTH CAROLINA
ENGINEERED TOWER SOLUTIONS, PLLC
NO. 4634
CERTIFICATE OF AUTHORIZATION

07/18/2025

COA:

SOUTH CAROLINA
No. 22960
CHRISTOPHER G. PLY

07/18/2025

REV	DATE	DETAILS
0	7/17/2025	CONSTRUCTION
1	07/18/2025	CONSTRUCTION
2		
3		

DRAWN BY: HM | CHECKED BY: AS

SHEET TITLE:

DETAILS I

SHEET # C-3.1 | CURRENT REV #: 1 | ETS #: 24131424

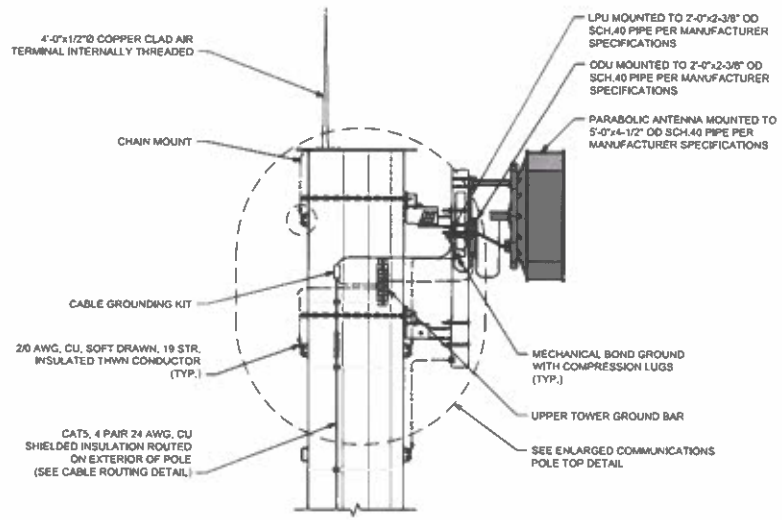

COMMUNICATION POLE TOP DETAIL

N.T.S.

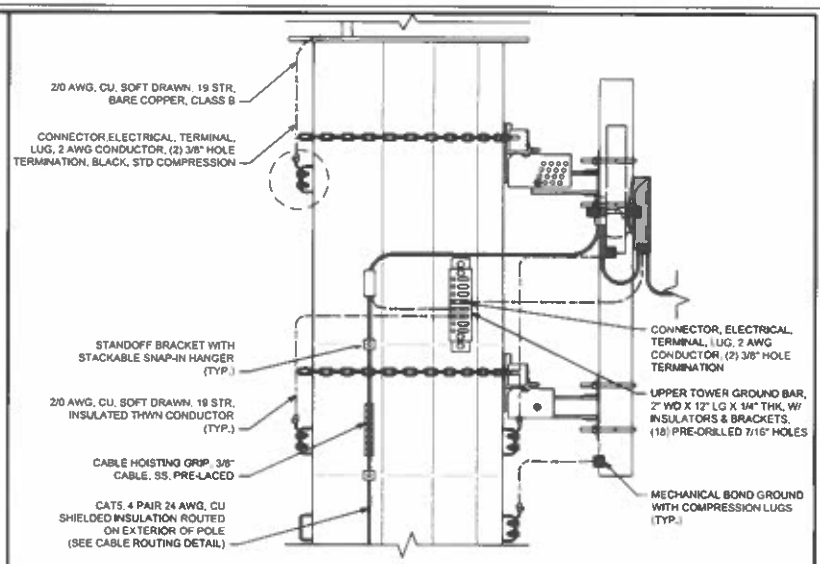

ENLARGED COMMUNICATION POLE TOP DETAIL

N.T.S.

NOTE:
2" PVC & WEATHERHEAD TO BE INSTALLED DURING CONCRETE CAISSON FORMING, PRIOR TO CONCRETE POUR.

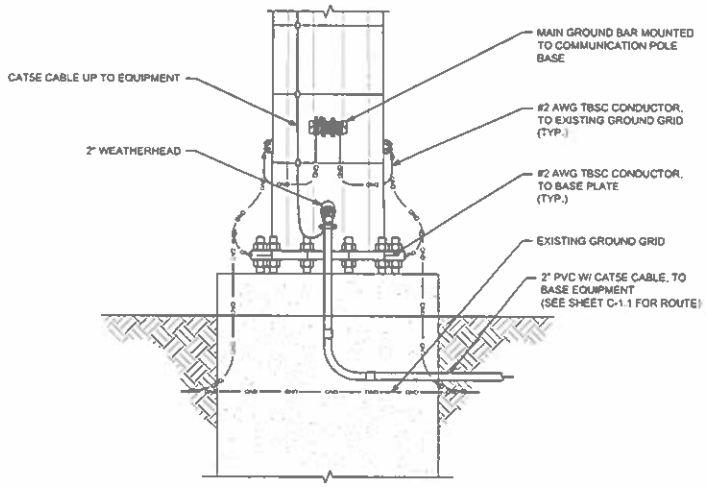

COMMUNICATION POLE BASE DETAIL (FRONT VIEW)

N.T.S.

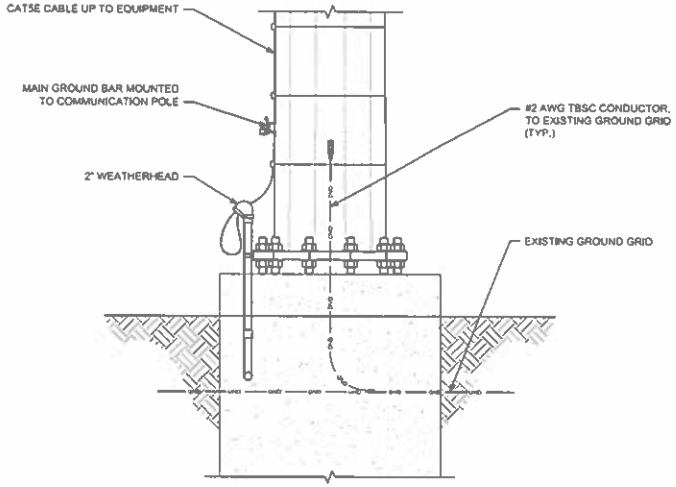

COMMUNICATION POLE BASE DETAIL (SIDE VIEW)

N.T.S.

PREPARED BY:

ENGINEERED TOWER SOLUTIONS
3227 WELLINGTON COURT
RALEIGH, NC 27615
919-782-2710
www.ets-pllc.com

PREPARED FOR:

DUKE ENERGY.

SUBSTATION NAME:
SUMTER ALICE DRIVE 230 SUB

SUBSTATION TRANSMISSION NUMBER:
T3966

SUBSTATION ADDRESS:
1242 ALICE DRIVE
SUMTER, SC 29150

LATITUDE/LONGITUDE:
33.9526633°, -080.3808861°

SEAL:

SOUTH CAROLINA
ENGINEERED TOWER SOLUTIONS, PLLC
NO. 4634
CERTIFICATE OF AUTHORIZATION
07/18/2025

COA:

No. 22960
CHRISTOPHER G. PLY
07/18/2025

REV	DATE	DETAILS
0	7/17/2025	CONSTRUCTION
1	07/18/2025	CONSTRUCTION
2		
3		

DRAWN BY: HM | CHECKED BY: AS

SHEET TITLE

DETAILS II

SHEET # C-3.2 | CURRENT REV #: 1 | ETS #: 24131424

NOTE:
IF POLE SECTIONS ARE JACKED TOGETHER PRIOR TO LIFTING AND SETTING THE POLE IN THE HOLE, THE POLE SECTIONS SHALL BE BOLTED AT THE SLIP JOINTS

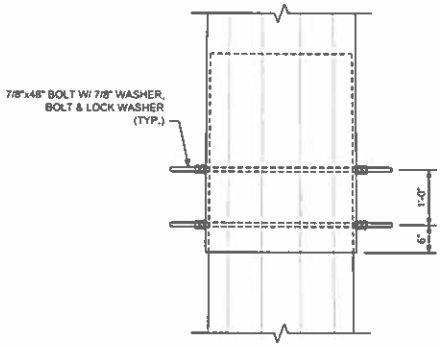

POLE SLIP JOINT DETAIL

N.T.S.

NOTES:
- DO NOT INSTALL CABLE GROUND KIT AT A BEND AND ALWAYS DIRECT GROUND WIRE DOWN TO GROUND BAR
- GROUNDING KIT SHALL BE ANDREW SUREGROUND TYPE KIT WITH TWO-HOLE LUG
- WEATHER PROOFING SHALL INCORPORATE PPC WEATHERPROOFING TAPE KIT; COLD SHRINK SHALL NOT BE USED

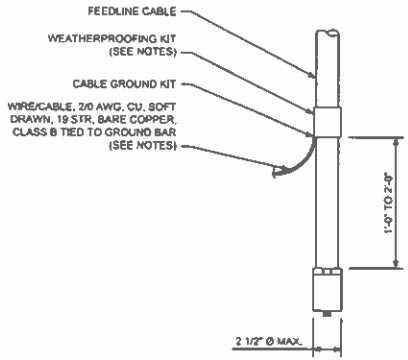

FEEDLINE CABLE GROUNDING DETAIL

N.T.S.

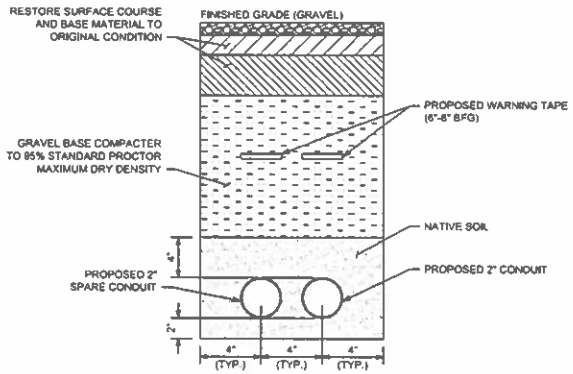

TRENCH DETAILS

N.T.S.

NOTES:
- MINIMUM SPACING OF 1'-0" BETWEEN ALL CADWELDS.
- TOP VIEW DETAIL ONLY TO BE USED AT SPLICE LOCATIONS.

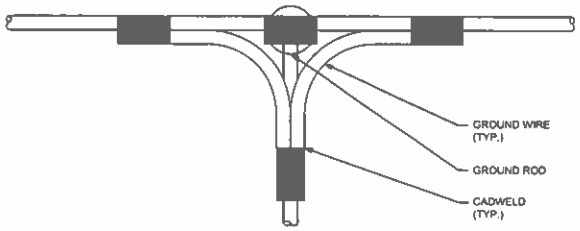

TOP VIEW

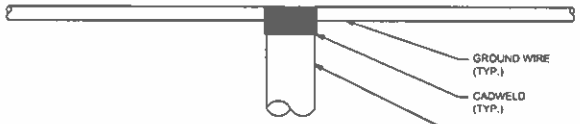

SIDE VIEW

CADWELD GROUNDING DETAIL

N.T.S.

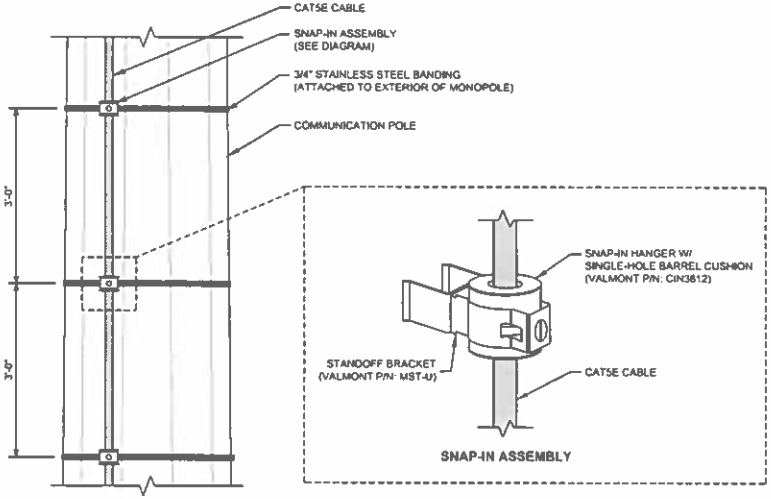

CABLE ROUTING DETAIL

N.T.S.

PREPARED BY:

ENGINEERED TOWER SOLUTIONS
3227 WELLINGTON COURT
RALEIGH, NC 27615
919-782-2710
www.ets-pllc.com

PREPARED FOR:

DUKE ENERGY.

SUBSTATION NAME:
SUMTER ALICE DRIVE 230 SUB

SUBSTATION TRANSMISSION NUMBER:
T3966

SUBSTATION ADDRESS:
1242 ALICE DRIVE
SUMTER, SC 29150

LATITUDE/LONGITUDE:
33.9528533°, -080.3906661°

SEAL:

SOUTH CAROLINA
ENGINEERED TOWER SOLUTIONS, PLLC
NO. 4634
CERTIFICATE OF AUTHORIZATION
07/18/2025

COA:

SOUTH CAROLINA
No. 22980
CHRISTOPHER G. PLY
07/18/2025

REV	DATE	DETAILS
0	7/17/2025	CONSTRUCTION
1	07/18/2025	CONSTRUCTION
2		
3		

DRAWN BY: HM | CHECKED BY: AS

SHEET TITLE:
DETAILS III

SHEET # C-3.3 | CURRENT REV #: 1 | ETS #: 24131424

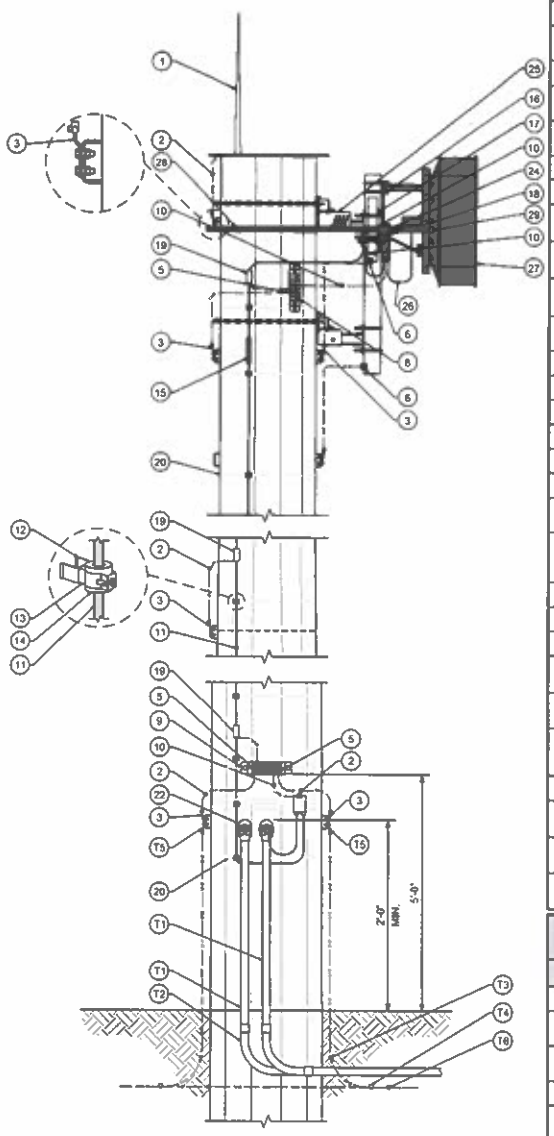

ITEM	QTY	UI	MAXIMO P/N	DESCRIPTION	NOTES/ENGINEERING RULE
1	1	EA	1505832	AIR TERMINAL, COPPER CLAD AIR BASE, 1/2" DIA. X 48"	MOUNT THE LIGHTNING ROD 180° AWAY FROM DISH POSITION
2	1	RO	4177461	WIRE/CABLE, 2/0 AWG, CU, SOFT DRAWN, 19 STR, BARE CU, CLASS B, PACKAGED IN 25' HAND COILS	APPROXIMATELY 16' REQUIRED
3	6	EA	1503888	TERMINAL, LUG, 2/0 AWG CONDUCTOR, (2) 1/2" HOLE BLACK, 1-3/4" CTR	FITS EVERY BONDING CONNECTOR WELDED TO VALMONT H-10 POLE
4	1	EA	1612775	TERMINAL, LUG, 2/0 AWG CONDUCTOR, (2) 1/2" HOLE, 1" CTR , BLACK, LONG	NEED 2 PER POLE - 2 ON LOWER GROUND BAR, (MAIN GNDS AT BOT) 1 ON UPPER
5	3	EA	1504572	TERMINAL, LUG, 2/0 AWG, COMP . CU . (2) 3/8" HOLE, 1" CTR	NEED 1 PER POLE - 1 ON UPPER GND BAR (MAIN GND AT TOP) 2 ON LOWER
6	2	EA	1505554	TERMINAL, LUG, 2/0 AWG CONDUCTOR, SGL HOLE 3/8" POST F/	2/0 AWG SINGLE HOLE 2 PER POLE, BOND FOR THE 4.5"& 2.5" PIPE
7	3	EA	LOOSE	TERMINAL, LUG, # 6 AWG . (2) 1/2" HOLE, 1 3/4" SPACE BLUE, LONG	USED FOR MID CAT-5 BOND TO POLE GROUND NEW PART
8	1	EA	1525371	BAR, GROUND, 2" WD X 12" LG X 1/4" THK, W/ INSULATORS & BRACKETS, (18) PRE-DRILLED 7/16" HOLE	BAR, GROUND - ENGINEERING RULE = TOP GROUND BAR - VERT
9	1	EA	1505048	BAR, GROUND, BUSS, 4" WD X 14" LG X 1/4" THK, TINNED, W/ HARDWARE	BAR GROUND - ENGINEERING RULE = BOTTOM GROUND BAR - HORIZ 3/4", 1" AND 1-3/4" ON CENTER
10	1	KT	1539777	LPU KIT, GROUNDING, LIGHTNING PROTECTION UNIT, ETHERNET CABLE, PRE-FITTED CABLE GLAND,	ENGINEERING RULE = 1 LPU KIT PER OSP CAT-5 CABLE (2 PER KIT)
11	1	SP	1539773	WIRE/CABLE,ELECTRICAL, CAT5, 4 PAIR, 24 AWG, CU, SHIELDED INSULATION	ENGINEERING RULE = SPOOL 328' - POLE 120' RADIO TO LPU MAXIMUM DISTANCE TO ISP PSU = 320'
12	4	PK	1473336	BRACKET, STANDOFF, MOUNTING, UNIVERSAL, NO ADAPTER	BRACKET - 10/BAG ENGINEERING RULE = 1 EVERY 3 FEET
13	4	PK	1505037	HANGER, CABLE, SNAP-IN STACKABLE, F/ 1-5/8" CABLE	SNAP-IN, 10/BAG - ENGINEERING RULE = 1 EVERY 3 FEET
14	4	PK	1564840	CUSHION, BARREL, 1-5/8", UNIVERSAL, 14-36MM, SNAP-IN, 10 PER BOX	BARREL CUSHION, 10/BAG - ENGINEERING RULE = 1 EVERY 3 FEET
15	1	EA	1554484	GRIP,CABLE, HOISTING, 3/8" CABLE, SS, PRE-LACED	ENGINEERING RULE = 1 PER CAT-5 RISER TOP & MID IF > 200'
16	1	EA	1503531	PIPE, 5' LG, ALUM, 4-1/2" OD, F/ ANTENNA MOUNT	PIPE, 5' LG, ALUM, 4-1/2" OD, 1 per DISH
17	1	EA	1479381	PIPE, 2-3/8", 2' LG, PLAIN ENDS, STL, F/ ANTENNA MOUNT	PIPE, 2-3/8", 2' LG, 1 per Radio/LPU ASSY
18	1	EA	1501289	BRACKET, MOUNTING, HOT DIP GALV STL, BOOM GATE CLAMP SET, 4-1/2" TO 12", 60 DEG ANGLE LEGS	TOWER LEG CLAMP SET ENGINEERING RULE = 1 PER 2' RADIO/LPU ASSY
19	3	EA	1539778	KIT, SHIELD GROUNDING, GROUND STRIPS, MASTIC TAPE, ELECTRICAL TAPE, GROUND BOLT & NUT, RETAINING ZIP TIES, F/	(1) AT BOTTOM (1) AT MIDDLE (ABOVE SLIP JOINT) (1) AT TOP OF MONOPOLE*
20	4	RO	1490605	BAND,STRAPPING, 3/4" WD, 100' LG, 0.03" THK, 316 SS, 1800 LB	BAND,STRAPPING, 3/4" ASSUME 8' DIAMETER & ALL OTHER MISC
21	50	EA	1490606	BUCKLE, BANDING, 3/4" WIDE, SS	BUCKLE, BANDING, 3/4" WD, SS
22	2	EA	904105	HEAD,SERVICE ENTRANCE,RIGID,2",SLIP-ON,PVC,WEATHER HD,STD PKG/5	WEATHER HEAD, 2" ALL TO BE SCHEDULE 40
23	1	EA	1545989	BRACKET, MOUNTING, CAMBIUM TILT BRACKET ASSY	BRACKET, MOUNTING, CAMBIUM TILT BRACKET ASSY Engineering Rule = 1 per PMP-450 REMOVE for 670
24	1	EA	1546830	MODULE, RADIO FREQUENCY, CAMBIUM 5X GHZ 450i INTEGRATED SUBSCRIBER MODULE	5 GHz PMP 450i Int SM
25	1	EA	1588737	CHAIN MOUNT, FLUSH ANTENNA, CHAIN MOUNT, TIE BACK ARMS, U-BOLTS, F/ DISH ANTENNA W/ SIDE SUPPORT BRACKETS, F/ 4-1/2" DIA -	4' AND 6' DISH ONLY - DHC8 SA-813 INCLUDES U-BOLTS FOR MOUNTING 4-1/2" OD PIPES AND SIDE-STRUT SUPPORT BRACKET FOR TIE-BACK ARMS
26	2	EA	1570020	JUMPER, COAX, 3' LG, N MALE TO N MALE, LMR-400	JUMPER, COAX, 3' LG, N MALE TO N MALE, LMR-400
27	1	EA	1564947	ANTENNA, PARABOLIC DISH, 5.25-5.85GHZ, N-FEMALE CONNECTOR, 6' HPDP, 36.5 DBI GAIN	6' HPDP CAMBIUM NON-INTEGRATED PMP OR PTP APPLICATIONS
28	2	EA	1501100	BRACKET, MOUNTING, STABILIZER BARS-STIFF ARM	--
29	2	EA	1824192	BRACKET, MOUNTING, 8" WD X 6" LG X 6" HT, HOT DIP GALV STL	--

TRANSMISSIONS

ITEM	QTY	UI	MAXIMO P/N	DESCRIPTION	NOTES
T1	TBD	EA	61354	CONDUIT, RIGID, HEAVY WALL, 2", 10' LG, SCH 40, PVC, 1 LG BELLED ONE END, RATED F/ 90 DEG C	2" x 10'-0" SCH. 40 GRAY PVC W/ COUPLING ON ONE END
T2	2	EA	79433	ELBOW,CONDUIT, RIGID, 2", GRAY PVC, 90 DEG, 9-1/2" RADIUS, PLAIN END, F/ 2" CONDUIT, PACKAGING: 15 PER PACK	2" x 9-1/2" RADIUS SCH. 40, 90 DEGREE PVC ELBOW
T3	16	FT	4177461	WIRE/CABLE, ELECTRICAL, BARE, GROUND, 19 STR SOL SD, 9 AWG, DEAD SOFT ANNEALED COPPERCLAD	2 CONNECTIONS / POLE ASSUME MINIMUM 2' ABOVE 4' BELOW
T4	1	BX	50130218	POWDER, WELDING, EXO, #300PLUS20, LIGHT GREEN	CAD WELD 4 PER POLE 10 CARTRIGES /BOX
T5	2	EA	67295	TERMINAL, TIN PLTD CU CONDUCTOR, WELDED CONDUCTOR CONNECTION, (2) 1/2" HOLE 1-3/4" CTR	POLE HOLE PATTERN TO CAD WELD 9X19 TO GRID MAT
T6	1		N/A	EXISTING SUBSTATION GROUND MAT	2 CONNECTIONS TO GRID MAT ASSUME 4' DEPTH

PREPARED BY:

ENGINEERED TOWER SOLUTIONS

3227 WELLINGTON COURT
RALEIGH, NC 27615
919-782-2710
www.ets-pllc.com

PREPARED FOR:

DUKE ENERGY.

SUBSTATION NAME:

SUMTER ALICE DRIVE 230 SUB

SUBSTATION TRANSMISSION NUMBER:

T3966

SUBSTATION ADDRESS:
1242 ALICE DRIVE
SUMTER, SC 29150

LATITUDE/LONGITUDE:
33.9528533°, -080.3900881°

SEAL:

SOUTH CAROLINA
ENGINEERED TOWER SOLUTIONS, PLLC
NO #634
CERTIFICATE OF AUTHORIZATION
07/18/2025

COA:

CHRISTOPHER G. PLY
No. 22960
07/18/2025

REV	DATE	DETAILS
0	7/17/2025	CONSTRUCTION
1	07/18/2025	CONSTRUCTION
2		
3		

DRAWN BY: HM | CHECKED BY: AS

SHEET TITLE

DETAILS V

SHEET # C-3.4 | CURRENT REV #: 1 | ETS # 24131424

FOUNDATION DESIGN DRAWINGS

SITE INFORMATION

SITE NAME	SUMTER ALICE DRIVE 230 SUB
SITE NUMBER	
SITE ADDRESS	1242 ALICE DRIVE SUMTER, SC 29150 SUMTER COUNTY
LAT / LONG.	33.9528533° N 80.3906981° W
ETS JOB#	24131424.STR.3851
TOWER MANUFACTURER	VALMONT
TOWER TYPE	PROPOSED MONOPOLE TOWER
TOWER HEIGHT	120-FT

LOCATION MAP

DRIVING DIRECTIONS

FROM SUMTER, HEAD WEST ON SC-763 S/E LIBERTY ST TOWARD N MAIN ST (1.9 MI)
TURN RIGHT ONTO ALICE DR (2.3 MI)
TURN LEFT AFTER WATER SPORTS AND SPAS

PROJECT CONTACTS

1. CLIENT REPRESENTATIVE

   ROBERT JACKSON
   SENIOR TELECOM ANALYST

   DUKE ENERGY
   (910) 523-8708

   ROBERT.JACKSON3@DUKE-ENERGY.COM

2. CONSTRUCTION MANAGER

   (TBD)

3. ENGINEER OF RECORD (EOR)

   CHRISTOPHER G. PLY, P.E., S.E.

   3227 WELLINGTON CT.
   RALEIGH, NC 27615
   OFFICE (919) 782-2710

   CHRIS.PLY@ETS-PLLC.COM

CODE COMPLIANCE

THIS FOUNDATION DESIGN IS BASED ON THE REQUIREMENTS OF TIA STRUCTURAL STANDARDS FOR STEEL ANTENNA TOWERS AND ANTENNA SUPPORTING STRUCTURES USING

TIA CODE	TIA-222-H
BUILDING CODE	2021 INTERNATIONAL BUILDING CODE
ULTIMATE WIND SPEED	132 MPH
ICE THICKNESS	1.00 IN
WIND SPEED WITH ICE	30 MPH
SERVICE LOAD WIND SPEED	60 MPH
EXPOSURE CATEGORY	C
RISK CATEGORY	III
TOPOGRAPHIC CATEGORY	1
S_S	0.206
S_1	0.089

SHEET INDEX

SHEET #	REV. (DATE)	DESCRIPTION
T-1	0 - 07/02/2025	TITLE PAGE
N-1	0 - 07/02/2025	PROJECT NOTES
S-1	0 - 07/02/2025	DRILLED SHAFT FOUNDATION DETAILS
-	-	-
-	-	-
-	-	-
-	-	-
-	-	-
-	-	-
-	-	-
-	-	-
-	-	-
-	-	-
-	-	-
-	-	-
-	-	-
-	-	-
-	-	-

PREPARED BY:

ENGINEERED TOWER SOLUTIONS

3227 WELLINGTON COURT
RALEIGH, NC 27615
o: 919-782-2710, f: 919-435-0831
www.ets-pllc.com

PREPARED FOR:

DUKE ENERGY.

SITE NAME:
SUMTER ALICE DRIVE 230 SUB
SITE NUMBER:

DESCRIPTION:
FOUNDATION DESIGN DRAWINGS

SITE ADDRESS:
1242 ALICE DRIVE
SUMTER, SC 29150
SUMTER COUNTY

LATITUDE/LONGITUDE:
33.9528533° N, 80.3906981° W

SEAL:

SOUTH CAROLINA PROFESSIONAL ENGINEER No. 22980 CHRISTOPHER G. PLY
07/02/2025

SOUTH CAROLINA ENGINEERED TOWER SOLUTIONS, PLLC NO. 4634 CERTIFICATE OF AUTHORIZATION

REV	DATE	DETAILS
0	07/02/2025	FOR CONSTRUCTION
1		
2		

DRAWN BY: DJN | CHECKED BY: JSH

SHEET TITLE:
TITLE PAGE

SHEET # T-1 | CURRENT REV # 0 | ETS #: 24131424.STR.3851

GENERAL NOTES:

1. ALL REFERENCES TO THE OWNER IN THESE DOCUMENTS SHALL BE CONSIDERED DUKE ENERGY OR ITS DESIGNATED REPRESENTATIVE.
2. ALL WORK PRESENTED ON THESE DRAWINGS MUST BE COMPLETED BY THE CONTRACTOR UNLESS NOTED OTHERWISE. THE CONTRACTOR MUST HAVE CONSIDERABLE EXPERIENCE IN PERFORMANCE OF WORK SIMILAR TO THAT DESCRIBED HEREIN, BY ACCEPTANCE OF THIS ASSIGNMENT, THE CONTRACTOR IS ATTESTING THAT HE DOES HAVE SUFFICIENT EXPERIENCE AND ABILITY, THAT HE IS KNOWLEDGEABLE OF THE WORK TO BE PERFORMED AND THAT HE IS PROPERLY LICENSED AND PROPERLY REGISTERED TO DO THIS WORK IN THE STATE OF SOUTH CAROLINA.
3. WORK SHALL BE COMPLETED IN ACCORDANCE WITH THE 2021 INTERNATIONAL BUILDING CODE.
4. UNLESS SHOWN OR NOTED OTHERWISE ON THE CONTRACT DRAWINGS, OR IN THE SPECIFICATIONS, THE FOLLOWING NOTES SHALL APPLY TO THE MATERIALS LISTED HEREIN, AND TO THE PROCEDURES TO BE USED ON THIS PROJECT.
5. ALL HARDWARE ASSEMBLY MANUFACTURER'S INSTRUCTIONS SHALL BE FOLLOWED EXACTLY AND SHALL SUPERSEDE ANY CONFLICTING NOTES ENCLOSED HEREIN.
6. IT IS THE CONTRACTOR'S SOLE RESPONSIBILITY TO DETERMINE ERECTION PROCEDURE AND SEQUENCE TO INSURE THE SAFETY OF THE STRUCTURE AND IT'S COMPONENT PARTS DURING ERECTION AND/OR FIELD MODIFICATIONS. THIS INCLUDES, BUT IS NOT LIMITED TO, THE ADDITION OF TEMPORARY BRACING, GUYS OR TIE DOWNS THAT MAY BE NECESSARY. SUCH MATERIAL SHALL BE REMOVED AND SHALL REMAIN THE PROPERTY OF THE CONTRACTOR AFTER THE COMPLETION OF THE PROJECT.
7. ALL DIMENSIONS, ELEVATIONS, AND EXISTING CONDITIONS SHOWN ON THE DRAWINGS SHALL BE FIELD VERIFIED BY THE CONTRACTOR PRIOR TO BEGINNING ANY MATERIALS ORDERING, FABRICATION OR CONSTRUCTION WORK ON THIS PROJECT. CONTRACTOR SHALL NOT SCALE CONTRACT DRAWINGS IN LIEU OF FIELD VERIFICATIONS. ANY DISCREPANCIES SHALL BE IMMEDIATELY BROUGHT TO THE ATTENTION OF THE OWNER AND THE OWNER'S ENGINEER. THE DISCREPANCIES MUST BE RESOLVED BEFORE THE CONTRACTOR IS TO PROCEED WITH THE WORK. THE CONTRACT DOCUMENTS DO NOT INDICATE THE METHOD OF CONSTRUCTION. THE CONTRACTOR SHALL SUPERVISE AND DIRECT THE WORK AND SHALL BE SOLELY RESPONSIBLE FOR ALL CONSTRUCTION MEANS, METHODS, TECHNIQUES, SEQUENCES, AND PROCEDURES. OBSERVATION VISITS TO THE SITE BY THE OWNER AND/OR THE ENGINEER SHALL NOT INCLUDE INSPECTION OF THE PROTECTIVE MEASURES OR THE PROCEDURES.
8. ALL MATERIALS AND EQUIPMENT FURNISHED SHALL BE NEW AND OF GOOD QUALITY, FREE FROM FAULTS AND DEFECTS AND IN CONFORMANCE WITH THE CONTRACT DOCUMENTS. ANY AND ALL SUBSTITUTIONS MUST BE PROPERLY APPROVED AND AUTHORIZED IN WRITING BY THE OWNER AND ENGINEER PRIOR TO INSTALLATION. THE CONTRACTOR SHALL FURNISH SATISFACTORY EVIDENCE AS TO THE KIND AND QUALITY OF THE MATERIALS AND EQUIPMENT BEING SUBSTITUTED.
9. THE CONTRACTOR SHALL BE RESPONSIBLE FOR INITIATING, MAINTAINING, AND SUPERVISING ALL SAFETY PRECAUTIONS AND PROGRAMS IN CONNECTION WITH THE WORK. THE CONTRACTOR IS RESPONSIBLE FOR ENSURING THAT THIS PROJECT AND RELATED WORK COMPLIES WITH ALL APPLICABLE LOCAL, STATE, AND FEDERAL SAFETY CODES AND REGULATIONS GOVERNING THIS WORK.
10. ACCESS TO THE PROPOSED WORK SITE MAY BE RESTRICTED. THE CONTRACTOR SHALL COORDINATE INTENDED CONSTRUCTION ACTIVITY, INCLUDING WORK SCHEDULE AND MATERIALS ACCESS, WITH THE RESIDENT LEASING AGENT FOR APPROVAL.
11. ALL PERMITS THAT MUST BE OBTAINED ARE THE RESPONSIBILITY OF THE CONTRACTOR. THE CONTRACTOR WILL BE RESPONSIBLE FOR ABIDING BY ALL CONDITIONS AND REQUIREMENTS OF THE PERMITS.
12. IF APPLICABLE, ALL CONCRETE WORK SHALL COMPLY TO LOCAL CODES AND THE ACI 318-14, "BUILDING REQUIREMENTS FOR STRUCTURAL CONCRETE".
13. 24 HOURS PRIOR TO THE BEGINNING OF ANY CONSTRUCTION, THE CONTRACTOR MUST NOTIFY THE APPLICABLE JURISDICTIONAL (STATE, COUNTY OR CITY) ENGINEER.

DESIGN TOWER BASE REACTIONS:

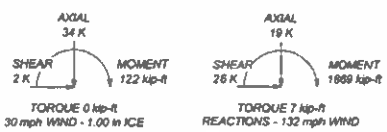

SITE SPECIFIC SOIL PARAMETERS:

1. THIS FOUNDATION DESIGN IS BASED ON THE GEOTECHNICAL REPORT BY ETS, PLLC JOB, NO. 24131424, DATE 06/13/2025
2. THE FOLLOWING SOIL PARAMETERS WERE USED IN THE DESIGN OF DRILLED PIER FOUNDATIONS

SOIL TYPE	TOP (ft.)	BOTTOM (ft.)	N (blows/ft.) (blows/m)	ϕ (deg.)	γ (lb/ft^3)	c (psf)	NOMINAL ULTIMATE NET BEARING STRENGTH (psf) DEEP FOUNDATIONS	S_u (psf)	k (pci)	ε50
COHESIONLESS	0.0	3.0	-	0	105	0	N/A	0	N/A	N/A
COHESIONLESS	3.0	4.0	-	27	105	0	N/A	200	N/A	N/A
COHESIONLESS	4.0	4.3	-	29	105	0	N/A	200	N/A	N/A
COHESIONLESS	4.3	6.0	-	29	42.6	0	N/A	200	N/A	N/A
COHESIONLESS	6.0	8.0	-	30	52.6	0	N/A	300	N/A	N/A
COHESIONLESS	8.0	12.0	-	30	52.6	0	N/A	500	N/A	N/A
COHESIONLESS	12.0	17.0	-	27	42.6	0	N/A	600	N/A	N/A
COHESIVE	17.0	22.0	-	0	37.6	200	N/A	100	N/A	N/A
COHESIONLESS	22.0	24.0	-	32	62.6	0	27000	1100	N/A	N/A

FOUNDATION NOTES:

FOUNDATION GENERAL NOTES:

1. FOUNDATION INSTALLATION SHALL BE SUPERVISED BY PERSONNEL KNOWLEDGEABLE AND EXPERIENCED WITH THE PROPOSED FOUNDATION TYPE. CONSTRUCTION SHALL BE IN ACCORDANCE WITH GENERALLY ACCEPTED PRACTICES AND IN A GOOD WORKMANLIKE MANNER.
2. CONTRACTOR TO VERIFY DIMENSIONS WITH ORIGINAL TOWER DRAWINGS. ETS SHALL BE NOTIFIED OF ANY DISCREPANCIES BETWEEN FIELD MEASURED DIMENSIONS AND ORIGINAL TOWER DRAWINGS.
3. FOUNDATION DESIGN MODIFICATIONS MAY BE REQUIRED IN THE EVENT THE DESIGN PARAMETERS ARE NOT APPLICABLE FOR THE SUBSURFACE CONDITIONS ENCOUNTERED DURING CONSTRUCTION.
4. THE FOUNDATION DESIGN IS IN ACCORDANCE WITH GENERALLY ACCEPTED PROFESSIONAL ENGINEERING PRINCIPLES AND PRACTICES WITHIN THE LIMITS OF SUBSURFACE DATA PROVIDED.
5. THE FOUNDATION DEPTH INDICATED IS BASED ON THE GRADE LINE DESCRIBED IN THE REFERENCE GEOTECHNICAL REPORT. FOUNDATION MODIFICATION MAY BE REQUIRED IN THE EVENT CUT OR FILL OPERATIONS HAVE TAKEN PLACE SUBSEQUENT TO THE GEOTECHNICAL INVESTIGATION.
6. THE FOUNDATION DESIGN ASSUMES THAT INSTALLATION METHODS WILL INCORPORATE THE PROCEDURES RECOMMENDED IN THIS REPORT.
7. THE FOUNDATION DESIGN ASSUMES FIELD INSPECTIONS WILL BE PERFORMED TO VERIFY THAT CONSTRUCTION MATERIALS, INSTALLATION METHODS, AND ASSUMED DESIGN PARAMETERS ARE ACCEPTABLE BASED ON THE CONDITIONS AT THE SITE.
8. THE FOUNDATION DESIGN ASSUMES NO CONSTRUCTION JOINTS. HOWEVER, CONSTRUCTION JOINTS SHALL BE PERMITTED UPON APPROVAL BY THE OWNER/ENGINEER.

EXCAVATION

1. WORK SHALL BE IN ACCORDANCE WITH LOCAL CODES AND SAFETY REGULATIONS. PROCEDURES FOR THE PROTECTION OF EXCAVATIONS, EXISTING CONSTRUCTION, AND UTILITIES SHALL BE ESTABLISHED PRIOR TO BEGINNING WORK.
2. THE SIDES OF THE EXCAVATION SHALL BE ROUGH AND FREE OF CUTTINGS.
3. LOOSE MATERIAL TO BE REMOVED FROM THE BOTTOM OF EXCAVATION PRIOR TO CONCRETE PLACEMENT.

REINFORCING STEEL

1. THE REINFORCING STEEL SHALL CONFORM TO THE REQUIREMENTS OF ASTM A-615, GRADE 60. IT SHALL BE DEFORMED AND SPLICES SHALL NOT BE ALLOWED UNLESS OTHERWISE NOTED.
2. WELDING IS PROHIBITED ON REINFORCING STEEL AND EMBEDMENTS.
3. REINFORCING CAGES SHALL BE BRACED TO RETAIN PROPER DIMENSIONS DURING HANDLING AND THROUGHOUT PLACEMENT OF CONCRETE. WHEN TEMPORARY CASING IS UTILIZED, BRACING SHALL BE ADEQUATE TO RESIST FORCES OCCURRING FROM FLOWING CONCRETE DURING CASING EXCAVATION.
4. SPACERS SHALL BE ATTACHED INTERMITTENTLY THROUGHOUT THE ENTIRE LENGTH OF TIEBACK REINFORCING TO INSURE CONCENTRIC PLACEMENT OF CASING IN EXCAVATIONS.
5. MINIMUM CONCRETE COVER FOR REINFORCEMENT SHALL BE 3" UNLESS OTHERWISE NOTED. APPROVED SPACERS SHALL BE USED TO INSURE A 3" MINIMUM COVER FOR REINFORCEMENT.
6. THE CONCRETE COVER FROM THE TOP OF THE FOUNDATION TO THE ENDS OF THE VERTICAL REINFORCEMENT SHALL NOT BE LESS THAN 3".

CONCRETE

1. WORK SHALL BE IN ACCORDANCE WITH THE ACI 318-14, "BUILDING CODE REQUIREMENTS FOR STRUCTURAL CONCRETE AND COMMENTARY".
2. THE CONCRETE SHALL DEVELOP A MINIMUM COMPRESSIVE STRENGTH OF 4000-PSI IN 28 DAYS.
3. PROPORTIONS OF CONCRETE MATERIALS SHALL BE SUITABLE FOR THE INSTALLATION METHOD UTILIZED AND SHALL RESULT IN DURABLE CONCRETE FOR RESISTANCE TO LOCAL ANTICIPATED AGGRESSIVE ACTIONS. THE DURABILITY REQUIREMENTS OF ACI 318-14 SHALL BE SATISFIED BASED ON THE CONDITIONS EXPECTED AT THE SITE.
4. CONCRETE SHALL BE PLACED IN A MANNER THAT WILL PREVENT SEGREGATION OF CONCRETE MATERIALS, INFILTRATION OF WATER OR SOIL, AND OTHER OCCURRENCES THAT MAY DECREASE THE STRENGTH OR DURABILITY OF THE FOUNDATION.
5. FREE FALL CONCRETE MAY BE USED PROVIDED FALL IS VERTICAL DOWN WITHOUT HITTING THE SIDES OF THE EXCAVATION, FORM WORK, REINFORCING BARS, FORM TIES, CAGE BRACING, OR OTHER OBSTRUCTIONS. UNDER NO CIRCUMSTANCES SHALL CONCRETE FALL THROUGH WATER.
6. THE MAXIMUM SIZE OF THE AGGREGATE SHALL NOT EXCEED A SIZE SUITABLE FOR THE INSTALLATION METHODS UTILIZED OR 2/3-CLEAR DISTANCE BEHIND OR BETWEEN REINFORCING. THE MAXIMUM SIZE MAY BE INCREASED TO 2/3-CLEAR DISTANCE PROVIDED WORKABILITY AND METHODS OF CONSOLIDATION SUCH AS VIBRATING WILL PREVENT HONEYCOMBS AND VOIDS.

FINISHING

1. THE TOP OF THE FOUNDATION SHALL BE SLOPED TO DRAIN WITH A FLOATED FINISH.
2. THE EXPOSED EDGES OF THE CONCRETE SHALL BE CHAMFERED ¾" x ¾".

SUB-GRADE PREPARATION

1. SHAPE TOP OF SUB-GRADE TO THE LINES AND GRADES SHOWN ON THE DRAWINGS.
2. MAINTAIN TOP OF SUB-GRADE IN A FREE-DRAINING CONDITION.
3. DO NOT STOCKPILE MATERIALS ON TOP OF SUB-GRADE UNLESS AUTHORIZED BY CONSTRUCTION MANAGER.
4. USE 6 IN LIFTS TO COMPACT SUB-GRADE TO A 95 PERCENT COMPACTION AT A MAXIMUM DRY DENSITY OF 115 PCF.
5. CONSTRUCT TOP OF SUB-GRADE WITHIN ONE INCH OF ESTABLISHED GRADE AND CROSS-SECTION.

PREPARED BY
ENGINEERED TOWER SOLUTIONS
3227 WELLINGTON COURT
RALEIGH, NC 27615
o 919-782-2710, f 919-435-0631
www.ets-pllc.com

PREPARED FOR
DUKE ENERGY.

SITE NAME
SUMTER ALICE DRIVE 230 SUB
SITE NUMBER

DESCRIPTION
FOUNDATION DESIGN DRAWINGS

SITE ADDRESS:
1242 ALICE DRIVE
SUMTER, SC 29150
SUMTER COUNTY

LATITUDE/LONGITUDE
33.8528533° N, 80.3906981° W

SEAL
SOUTH CAROLINA REGISTERED PROFESSIONAL ENGINEER No. 22980 CHRISTOPHER G. PEY
07/02/2025
SOUTH CAROLINA ENGINEERED TOWER SOLUTIONS, PLLC NO. 4634 CERTIFICATE OF AUTHORIZATION

REV	DATE	DETAILS
0	07/02/2025	FOR CONSTRUCTION
1		
2		

DRAWN BY: DJN | CHECKED BY: JSH

SHEET TITLE
PROJECT NOTES

SHEET # N-1 | CURRENT REV # 0 | ETS # 24131424.STR.3851

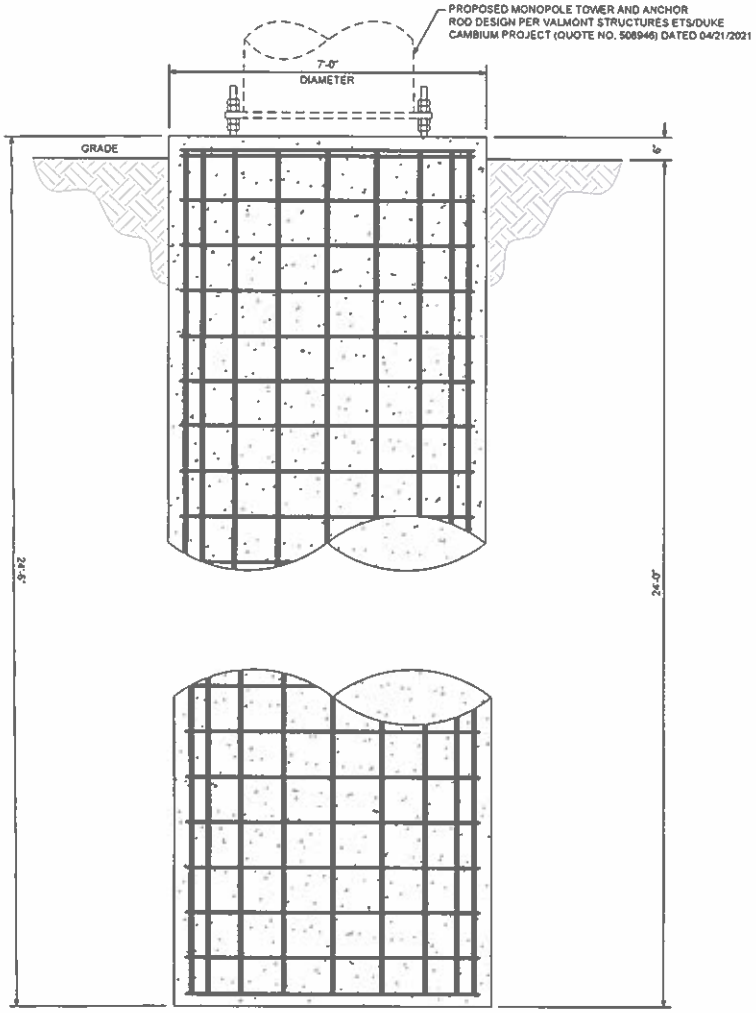

ELEVATION VIEW

SCALE: 3/8" = 1'-0"

FOUNDATION MATERIAL SCHEDULE

PART	SIZE	QUANTITY	NOTES
VERTICAL REBAR	#8 (24.0 FT LONG)	24	EVENLY SPACED
REBAR TIES	#4 (22.6 FT LONG)	33	(2) WITHIN TOP 5" OF PIER, THEN 8" O.C. WITHIN ANCHOR BOLTS, THEN 12" O.C.
CONCRETE	-	34.92 CUBIC YARDS	4,000 PSI

NOTES:

1. CONCRETE SHALL HAVE A MINIMUM 28-DAY COMPRESSIVE STRENGTH OF 4,000 PSI, IN ACCORDANCE WITH ACI 318-19.
2. REBAR TO CONFORM TO ASTM SPECIFICATIONS A615 GRADE 60.
3. ALL REBAR TO HAVE A MINIMUM OF 3" CONCRETE COVER.
4. REBAR TIES SPLICE LOCATIONS TO ALTERNATE SIDES THROUGHOUT LENGTH OF REBAR CAGE.
5. ALL EXPOSED CONCRETE CORNERS TO BE CHAMFERED ½".
6. THIS FOUNDATION DESIGN IS BASED ON THE GEOTECHNICAL REPORT BY ETS, PLLC JOB. NO. 24131421, DATE 06/12/2025.
7. SEE THE GEOTECHNICAL REPORT FOR DRILLED PIER INSTALLATION REQUIREMENTS, IF SPECIFIED.

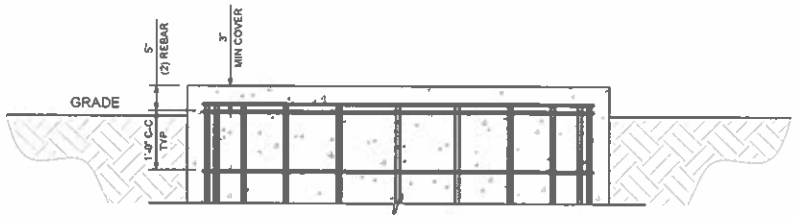

REBAR TIES DETAIL (TOP)

SCALE: NTS

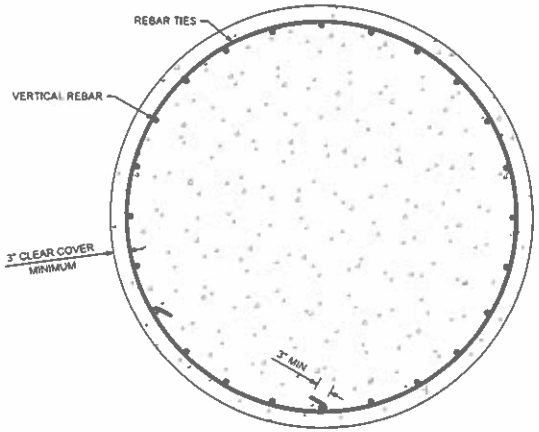

PLAN VIEW

SCALE: 3/8" = 1'-0"

PREPARED BY

ENGINEERED TOWER SOLUTIONS

3227 WELLINGTON COURT
RALEIGH, NC 27615
o 919-782-2710, f 919-435-0831
www.ets-pllc.com

PREPARED FOR

DUKE ENERGY.

SITE NAME:
SUMTER ALICE DRIVE 230 SUB

SITE NUMBER:

DESCRIPTION:
FOUNDATION DESIGN DRAWINGS

SITE ADDRESS:
1242 ALICE DRIVE
SUMTER, SC 29150
SUMTER COUNTY

LATITUDE/LONGITUDE:
33.9526533° N, 80.3906981° W

SEAL

SOUTH CAROLINA PROFESSIONAL ENGINEER No. 22980 CHRISTOPHER G. PLY
07/02/2025

SOUTH CAROLINA ENGINEERED TOWER SOLUTIONS, PLLC NO. 4834 CERTIFICATE OF AUTHORIZATION

REV	DATE	DETAILS
0	07/02/2025	FOR CONSTRUCTION
1		
2		

DRAWN BY: DJN | CHECKED BY: JSM

SHEET TITLE:
DRILLED SHAFT FOUNDATION DETAILS

SHEET # S-1 | CURRENT REV # 0
ETS #: 24131424.STR.3851

SITE PLAN DATA TABLE

OWNER OF RECORD	CAROLINA POWER & LIGHT CO DUKE ENERGY CENTER 550 S TRYON STREET CHARLOTTE, NC 28202	
APPLICANT	DUKE ENERGY PROGRESS INC 150 FAYETTEVILLE STREET, BOX 1551 MOKERY, NC 28803	
PRIMARY CONTACT S	SEE T-1	
PROJECT ADDRESS	1242 ALICE DRIVE SUMTER, SC 29150	
TAX MAP IDENTIFICATION NUMBER	203-00-00-005	
WITHIN SUMTER CITY LIMITS	YES	
PROPOSED USE	120' UTILITY POLE FOR DUKE ENERGY INTERNAL USE FOR SUBSTATION ROADBE ACCESS	
ZONING DISTRICT	R-15	
MINIMUM DEVELOPMENT REQUIREMENTS	MINIMUM LOT AREA PER INDIVIDUAL UNIT	N/A
	MINIMUM LOT WIDTH	100 FT
	MINIMUM LOT DEPTH	120 FT
	MINIMUM YARDS, PER STRUCTURE	
	FRONT	35 FT
	SIDE	50 FT
	REAR	50 FT
	MAXIMUM IMPERVIOUS SURFACE PERCENTAGE	0.4
	MAXIMUM DENSITY (UNITS PER GROSS ACRE)	N/A
	MAXIMUM HEIGHT OF BUILDINGS	45 FT
FLOOD PLAIN INSURANCE MAP INFORMATION	MAP NUMBER 45085C0208F EFFECTIVE ON 10/27/2022	
SIZE OF PARCEL	15.4 ACRES	
SIZE OF SITE PLAN	0.0893	
PERCENTAGE OF PARCEL UNDEVELOPED	99%	
EXISTING BUILDINGS	N/A	

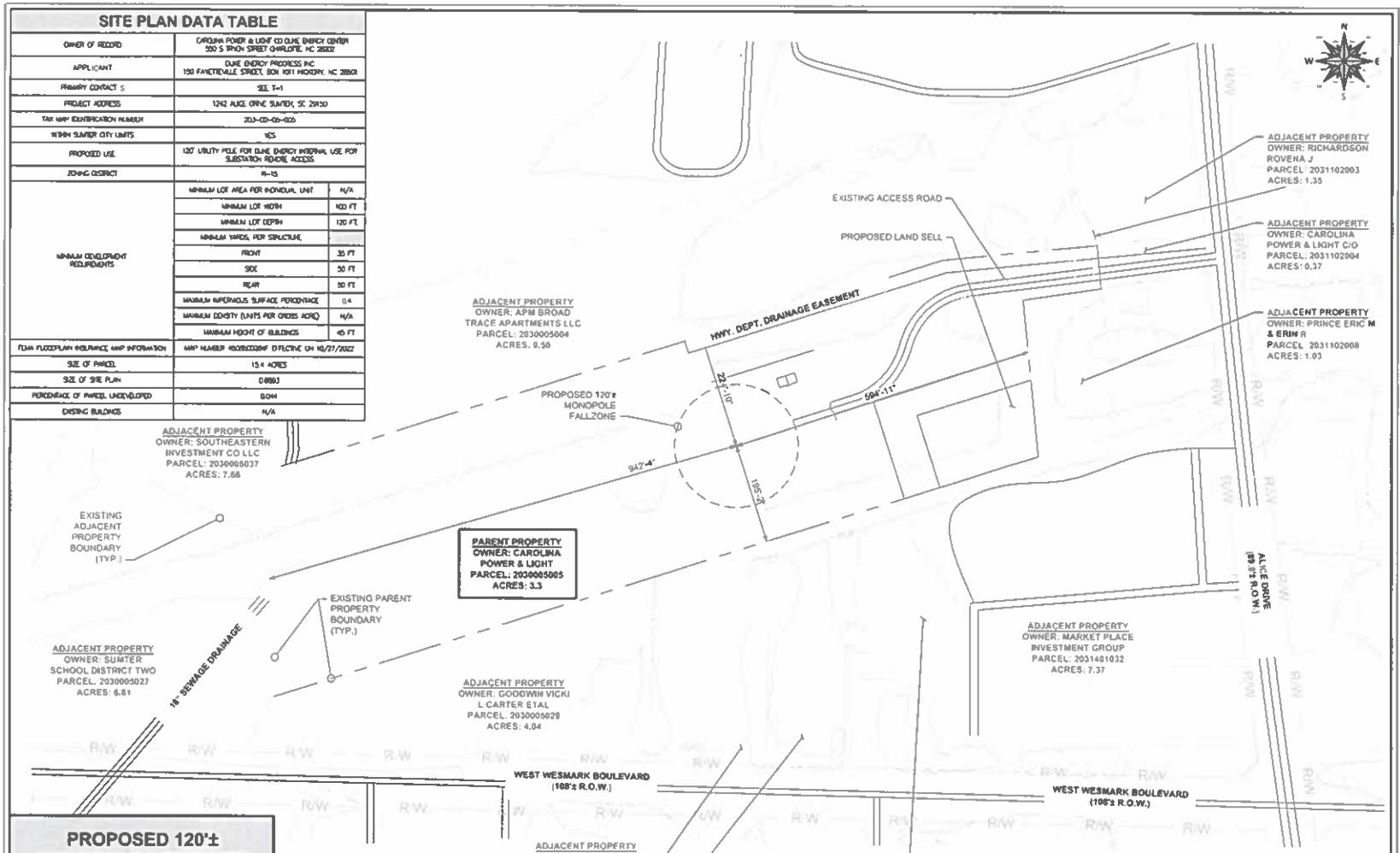

PROPOSED 120'± MONOPOLE SETBACKS

PROPERTY BOUNDARY LINE	DISTANCE
NORTH	224'-10"±
EAST	594'-11"±
SOUTH	195'-2"±
WEST	942'-4"±

NOTES

1. SITE PLAN BASED ON SURVEY COMPLETED BY JMT DATED 02/24/2025.
2. ALL INFORMATION SHOWN ON THIS PLAN IS FOR REFERENCE ONLY. CONTRACTOR TO VERIFY THAT ALL EXISTING INFORMATION IS AS INDICATED ON THE SITE PLAN, AND NOTIFY THE CONSTRUCTION MANAGER OF ANY DISCREPANCIES. ALL PERTINENT ITEMS AND DIMENSIONS ARE RECOMMENDED TO BE VERIFIED IN THE FIELD. ENGINEERED TOWER SOLUTIONS, PLLC IS NOT LIABLE AND DOES NOT ASSUME RESPONSIBILITY FOR THIS CONTENT.

OVERALL PROPERTY PLAN

1" = 200'-0"

PREPARED BY:

ENGINEERED TOWER SOLUTIONS

3227 WELLINGTON COURT
RALEIGH, NC 27615
919-782-2710
www.ets-pllc.com

PREPARED FOR:

DUKE ENERGY.

SUBSTATION NAME:

SUMTER ALICE DRIVE 230 SUB

SUBSTATION TRANSMISSION NUMBER:

T3966

SUBSTATION ADDRESS:
1242 ALICE DRIVE
SUMTER, SC 29150

LATITUDE/LONGITUDE:
33.9528533°, -080.3906961°

SEAL:

SOUTH CAROLINA
ENGINEERED TOWER SOLUTIONS, PLLC
NO 4634
CERTIFICATE OF AUTHORIZATION
07/18/2025

COA:

SOUTH CAROLINA
LICENSED PROFESSIONAL ENGINEER
No. 22980
CHRISTOPHER G. PLY
07/18/2025

REV	DATE	DETAILS
0	7/17/2025	CONSTRUCTION
1	07/18/2025	CONSTRUCTION
2		
3		

DRAWN BY: HM | CHECKED BY: AS

SHEET TITLE:

OVERALL PROPERTY PLAN

SHEET # C-1.0 | CURRENT REV # 1
ETS # 24131424

Sumter County, SC

Summary

Parcel Number	203-00-05-005
Legal Description	Z40-259 15.4AC -
District	17 - City of Sumter
Neighborhood	COM,BROAD EX, HWY 441
Location Address	W WESMARK BLVD SUMTER 29150
Plat Book/Page	PBJ0000

View Map

Owners

CAROLINA POWER & LIGHT CO
DUKE ENERGY CENTER
550 S TRYON STREET
CHARLOTTE NC 28202

Valuation

Year	2024	2023	2022	2021
Market Land Value	$385,000	$385,000	$385,000	$385,000
+ Market Improvement Value	$0	$0	$0	$0
+ Market Misc Value	$0	$0	$0	$0
= Total Market/Exemption Value	$385,000	$385,000	$385,000	$385,000
Assessed Land Value	**$0**	**$40,430**	**$40,430**	**$40,430**
+ Assessed Improvement Value	**$0**	**$0**	**$0**	**$0**
+ Assessed Misc Value	$0	$0	$0	$0
= Total Assessed Value	$20	$40,430	$40,430	$40,430

Legal Residence Form

Mailing Address Change

Military Non-Resident

Land

Land Use	Units	Unit Type	Land Type	Notes	AgUse Value	Market Land Value
UTIL (21)	7	Land Rate Code 1000	OPEN/CULTIVATED INSUFNT R	C-6	$0	$175,000
UTIL (21)	8.4	Land Rate Code 1000	TIMBER SITE INDEX 50-LESS 1	T-6	$0	$210,000

Apply for Ag Special Assessment

Tax information

Click here to view the Tax Collector website.

Sales

Sale Date	SalePrice	Grantee	Land Only Sale	Deed Type
1/1/1993	$0	CAROLINA POWER & LIGHT CO; DUKE ENERGY CENTER	C	

Recent Sales in Area

Sale date range:

From: 09/02/2

To: 09/02/2

Search Sales by Neighborhood

Sales by Area

Distance: 1500

Units: Feet

Search Sales by Distance

Map

No data available for the following modules: Buildings, Miscellaneous Improvement Information, Tax History, Sketches.

Sumter County makes every effort to produce the most accurate information possible. No warranties, expressed or implied, are provided for the data herein, its use or interpretation.
| User Privacy Policy | GDPR Privacy Notice
Last Data Upload: 9/1/2025, 9:27:59 PM

Contact Us

Developed by SCHNEIDER GEOSPATIAL

UNITED STATES OF AMERICA
FEDERAL COMMUNICATIONS COMMISSION
ANTENNA STRUCTURE REGISTRATION

OWNER: Duke Energy Business Services, LLC

FCC Registration Number (FRN): 0020991360

ATTN: Telecommunications Div, CS03A **Duke Energy Business Services, LLC** **401 South College Street** **Charlotte, NC 28202**	**Antenna Structure Registration Number** **1330750** **Issue Date** **06/02/2025**
Location of Antenna Structure **1242 Alice Drive** **Sumter, SC 29150** **County: SUMTER**	**Ground Elevation (AMSL)** **50.6 meters** **Overall Height Above Ground (AGL)** **37.8 meters**
Latitude 33- 57- 10.3 N **Longitude** 080- 23- 26.5 W **NAD83**	**Overall Height Above Mean Sea Level (AMSL)** **88.4 meters**
Center of Array Coordinates N/A	**Type of Structure** **MTOWER** **Monopole**
Painting and Lighting Requirements: **FAA Chapters NONE** **Conditions:**	

This registration is effective upon completion of the described antenna structure and notification to the Commission. **YOU MUST NOTIFY THE COMMISSION WITHIN 5 DAYS OF COMPLETION OF CONSTRUCTION OR CANCELLATION OF YOUR PROJECT, please file FCC Form 854.** To file electronically, connect to the antenna structure registration system by pointing your web browser to https://www.fcc.gov/antenna-structure-registration. Electronic filing is required. Use purpose code "NT" for notification of completion of construction; use purpose code "CA" to cancel your registration.

The Antenna Structure Registration is not an authorization to construct radio facilities or transmit radio signals. It is necessary that all radio equipment on this structure be covered by a valid FCC license or construction permit.

You must immediately provide a copy of this Registration to all tenant licensees and permittees sited on the structure described on this Registration (although not required, you may want to use Certified Mail to obtain proof of receipt), and *display* your Registration Number at the site. See reverse for important information about the Commission's Antenna Structure Registration rules.

FCC 854R
June 2021

Reference Copy

You must comply with all applicable FCC obstruction marking and lighting requirements, as set forth in Part 17 of the Commission's Rules (47 C.F.R. Part 17). These rules include, but are not limited to:

- ***Posting the Registration Number:*** The Antenna Structure Registration Number must be displayed in a conspicuous place so that it is readily visible near the base of the antenna structure. Materials used to display the Registration Number must be weather-resistant and of sufficient size to be easily seen at the base of the antenna structure. Exceptions exist for certain historic structures. See 47 C.F.R. 17.4(g)-(h).

- ***Inspecting lights and equipment:*** The obstruction lighting must be observed at least every 24 hours in order to detect any outages or malfunctions. Lighting equipment, indicators, and associated devices must be inspected at least once every three months.

- ***Reporting outages and malfunctions:*** When any top steady-burning light or a flashing light (in any position) burns out or malfunctions, the outage must be reported to the nearest FAA Flight Service Station, unless corrected within 30 minutes. The FAA must again be notified when the light is restored. The owner must also maintain a log of these outages and malfunctions.

- ***Maintaining assigned painting:*** The antenna structure must be repainted as often as necessary to maintain good visibility.

- ***Complying with environmental rules:*** If you certified that grant of this registration would not have a significant environmental impact, you must nevertheless maintain all pertinent records and be ready to provide documentation supporting this certification and compliance with the rules, in the event that such information is requested by the Commission pursuant to 47 C.F.R. 1.1307(d).

- ***Updating information:*** The owner must notify the FCC of proposed modifications to this structure; of any change in ownership; or, within 30 days of dismantlement of the structure.

Copies of the Code of Federal Regulations (which contain the FCC's antenna structure registration rules, 47 C.F.R Part 17) are available from the Government Printing Office (GPO). To purchase CFR volumes, call (202) 512-1800. For GPO Customer Service, call (202) 512-1803. For additional FCC information, consult the Antenna Homepage on the internet at https://www.fcc.gov/antenna-structure-registration or call (877) 480-3201 (TTY 717-338-2824).

Reference Copy

NOTES

1. SITE PLAN BASED ON GOOGLE EARTH AERIAL IMAGERY
2. ALL INFORMATION SHOWN ON THIS PLAN IS FOR REFERENCE ONLY. CONTRACTOR TO VERIFY THAT ALL EXISTING INFORMATION IS AS INDICATED ON THE SITE PLAN, AND NOTIFY THE CONSTRUCTION MANAGER OF ANY DISCREPANCIES. ALL PERTINENT ITEMS AND DIMENSIONS ARE RECOMMENDED TO BE VERIFIED IN THE FIELD. ENGINEERED TOWER SOLUTIONS, PLLC IS NOT LIABLE AND DOES NOT ASSUME RESPONSIBILITY FOR THIS CONTENT.

SITE PLAN

N.T.S.

PREPARED BY:

ENGINEERED TOWER SOLUTIONS
3227 WELLINGTON COURT
RALEIGH, NC 27615
919-782-2710
www.ets-pllc.com

PREPARED FOR:

DUKE ENERGY.

SITE NAME:
SUMTER ALICE DRIVE 230 SUB

SITE NUMBER:
SCSMT014

SITE ADDRESS:
1242 ALICE DRIVE
SUMTER, SC 29150

LATITUDE/LONGITUDE:
33.9528533° -80.3906981°

SEAL:

PRELIMINARY NOT FOR CONSTRUCTION

COA:

REV	DATE	DETAILS
A	07/24/2025	PRELIMINARY
0		
1		
2		

DRAWN BY: FB | CHECKED BY: PB

SHEET TITLE:
SITE PLAN

SHEET #: C-1 | CURRENT REV # A | ETS # 24131424

1 - EXISTING NORTHEAST ELEVATION
N.T.S.

2 - PROPOSED NORTHEAST ELEVATION
N.T.S.

3 - EXISTING SOUTHWEST ELEVATION
N.T.S.

4 - PROPOSED SOUTHWEST ELEVATION
N.T.S.

PREPARED BY

ENGINEERED TOWER SOLUTIONS
3227 WELLINGTON COURT
RALEIGH, NC 27615
919-782-2710
www.ets-pllc.com

PREPARED FOR

DUKE ENERGY.

SITE NAME
SUMTER ALICE DRIVE 230 SUB
SITE NUMBER:
SCSMT014
SITE ADDRESS:
1242 ALICE DRIVE
SUMTER, SC 29150
LATITUDE/LONGITUDE:
33.9528533° -80.3906981°

SEAL

PRELIMINARY
NOT FOR CONSTRUCTION

COA

REV	DATE	DETAILS
A	07/24/2025	PRELIMINARY
0		
1		
2		

DRAWN BY: FB | CHECKED BY: PB

SHEET TITLE
ELEVATIONS

SHEET # **C-2.1** | CURRENT REV # A | ETS # 24131424

1 - EXISTING NORTH ELEVATION
N.T.S.

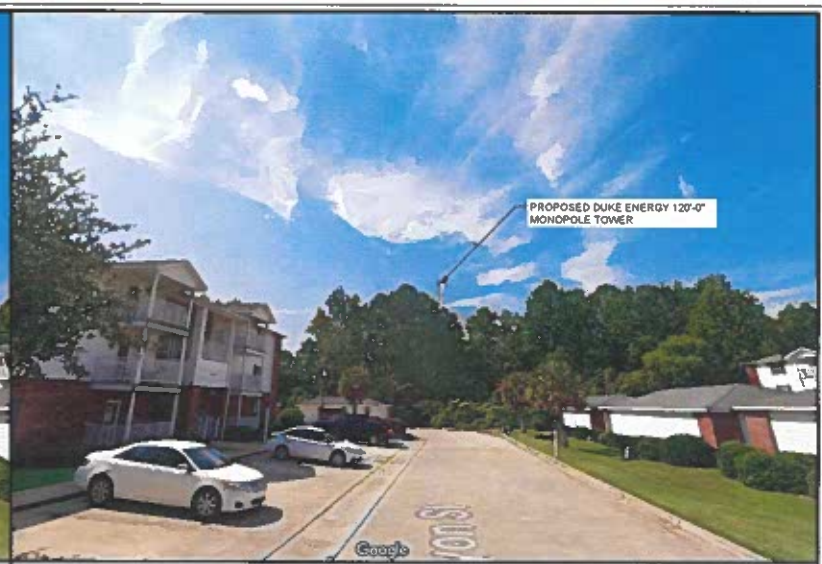

2 - PROPOSED NORTH ELEVATION
N.T.S.

3 - EXISTING SOUTH ELEVATION
N.T.S.

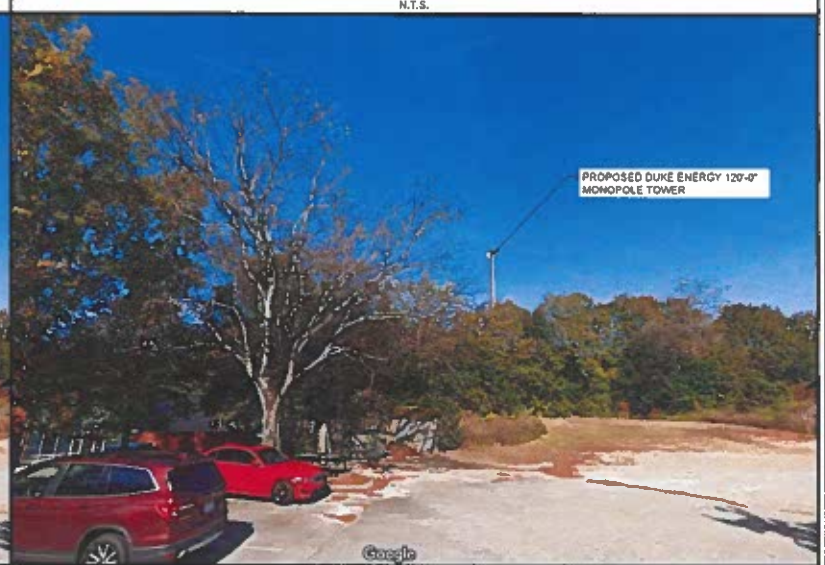

4 - PROPOSED SOUTH ELEVATION
N.T.S.

PREPARED BY

ENGINEERED TOWER SOLUTIONS

3227 WELLINGTON COURT
RALEIGH, NC 27615
919-782-2710
www.ets-pllc.com

PREPARED FOR

DUKE ENERGY.

SITE NAME:
SUMTER ALICE DRIVE 230 SUB

SITE NUMBER:
SCSMT014

SITE ADDRESS:
1242 ALICE DRIVE
SUMTER, SC 29150

LATITUDE/LONGITUDE:
33.9528533° -80.3806981°

SEAL

PRELIMINARY
NOT FOR CONSTRUCTION

COA

REV	DATE	DETAILS
A	07/24/2025	PRELIMINARY
0		
1		
2		

DRAWN BY FB | CHECKED BY PB

SHEET TITLE

ELEVATIONS

SHEET # **C-2.2** | CURRENT REV # A
ETS # 24131424

Aug. 5, 2025

Sumter-City County Planning Commission
12 W. Liberty St
Sumter, SC 29150

Subject: Sumter Alice Dr 230 kV Substation
Proposed Duke Energy Monopole
1242 Alice Dr, Sumter, SC 29150
RE: 5.b.4.d.9 Removal Agreement

Dear Sumter-City County Planning Commission:

Duke Energy is proposing to install a monopole at their existing substation located at 1242 Alice Dr., Sumter, SC 29150. We are installing a wireless network device and utility monopole as part of Duke Energy's communication network to securely transmit data to and from substations. The monopole will support smart technology improvements we have made at this location to increase reliability and quality of service to our customers.

Duke Energy Progress, LLC agrees to remove the monopole within 180 days following the end of its useful life.

If you have any questions, feel free to contact me at (910) 523-8708 or the email address shown below.

Sincerely,

Robert Jackson
Senior Telecom Analyst
Robert.Jackson3@duke-energy.com

CC:
Quinetta Buterbaugh, Duke Energy District Manager
Alicia Dasch, Duke Energy Infrastructure Engagement Manager
Bush Brunson, Duke Energy Infrastructure Engagement Manager

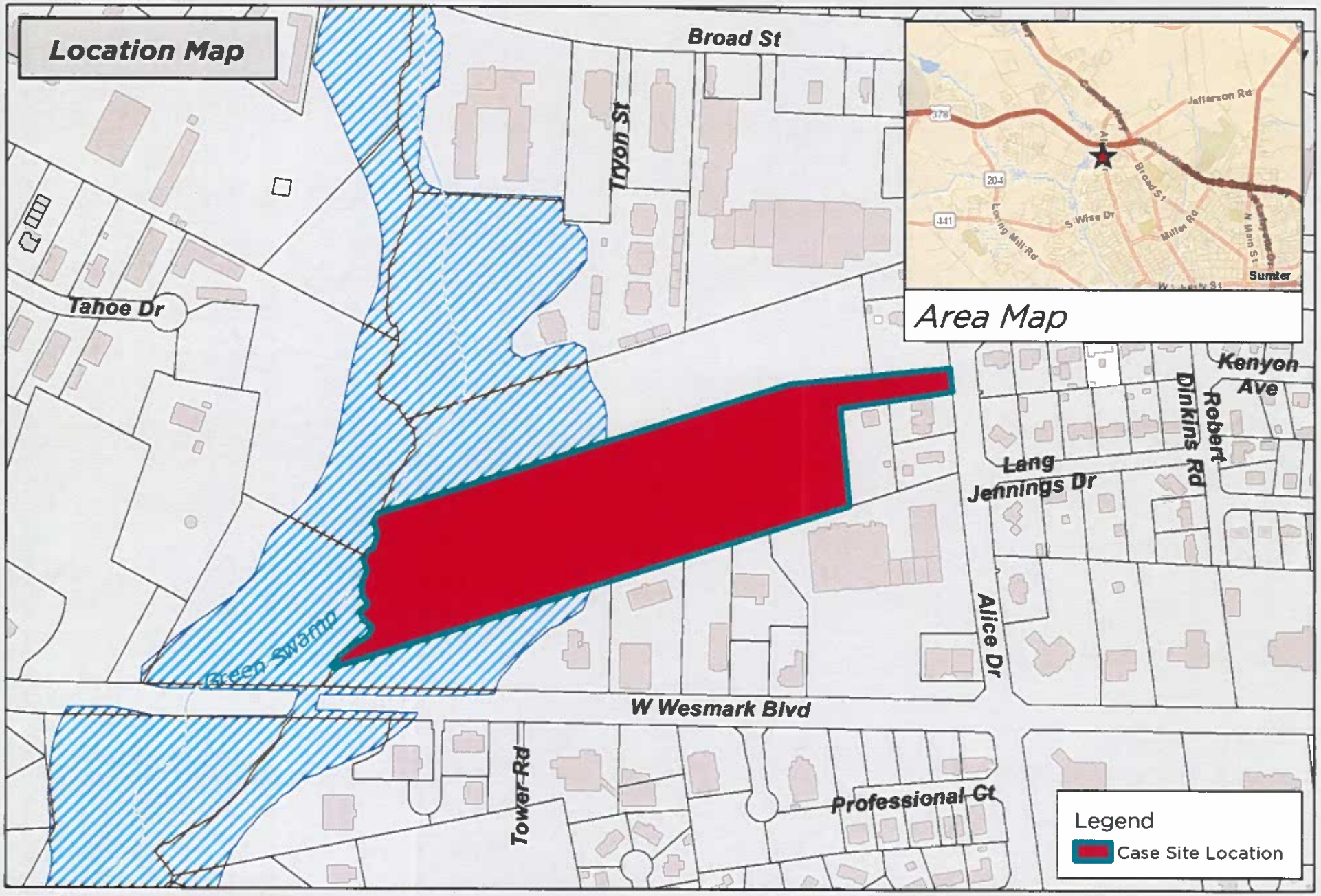

DISCLAIMER: While the data of this map has been tested for accuracy, the Sumter-City County Planning Commission disclaims any or all responsibility for the exact accuracy or correctness of the map. The Sumter City-County Planning Commission shall not become liable to the user of this map for any reason. In using this map, the user agrees to hold the Sumter City-County Planning Commission harmless of any or all liabilities arising from the use of this map and/or its data.

0 200 400 Feet

1 inch = 400 feet

Map Prepared by: Sumter Planning Department
Copyright 2025
Date: 8/20/2025
User Name: crobbins
Document Name: BOA-25-26

Sumter SOUTH CAROLINA

BOA-25-26
1242 Alice Dr, Sumter, SC 29150
Tax Map # 203-00-05-004 & 203-11-02-135

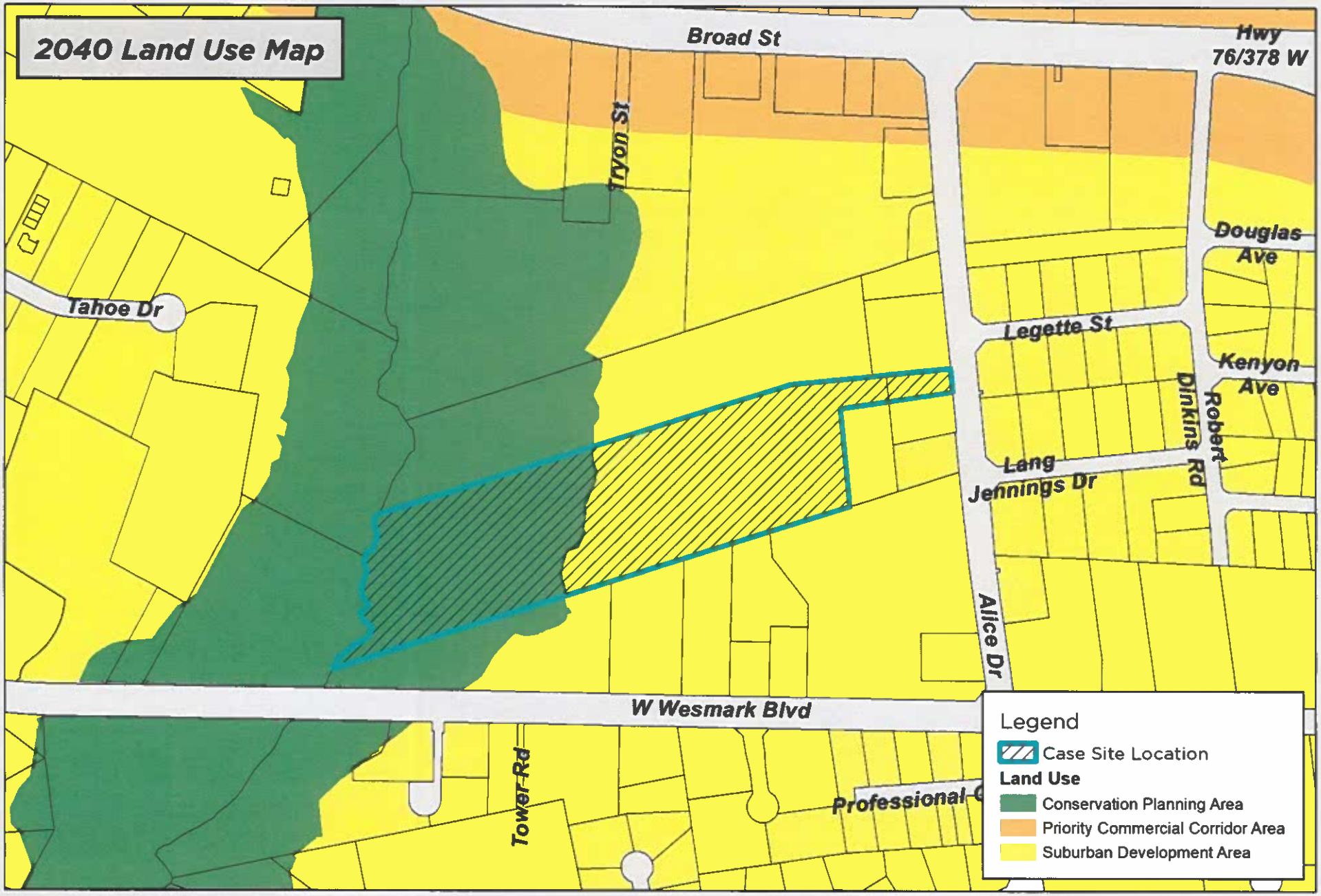

DISCLAIMER: While the data of this map has been tested for accuracy, the Sumter-City County Planning Commission disclaims any or all responsibility for the exact accuracy or correctness of the map. The Sumter City-County Planning Commission shall not become liable to the user of this map for any reason. In using this map, the user agrees to hold the Sumter City-County Planning Commission harmless of any or all liabilities arising from the use of this map and/or its data.

0 200 400 Feet

1 inch = 400 feet

Map Prepared by: Sumter Planning Department
Copyright 2025
Date: 8/20/2025
User Name: crobbins
Document Name: BOA-25-26

Sumter SOUTH CAROLINA

BOA-25-26
1242 Alice Dr, Sumter, SC 29150
Tax Map # 203-00-05-004 & 203-11-02-135

DISCLAIMER: While the data of this map has been tested for accuracy, the Sumter-City County Planning Commission disclaims any or all responsibility for the exact accuracy or correctness of the map. The Sumter City-County Planning Commission shall not become liable to the user of this map for any reason. In using this map, the user agrees to hold the Sumter City-County Planning Commission harmless of any or all liabilities arising from the use of this map and/or its data.

0 200 400 Feet

1 inch = 400 feet

Map Prepared by: Sumter Planning Department
Copyright 2025
Date: 8/20/2025
User Name: crobbins
Document Name: BOA-25-26

Sumter SOUTH CAROLINA

BOA-25-26
1242 Alice Dr, Sumter, SC 29150
Tax Map # 203-00-05-004 & 203-11-02-135

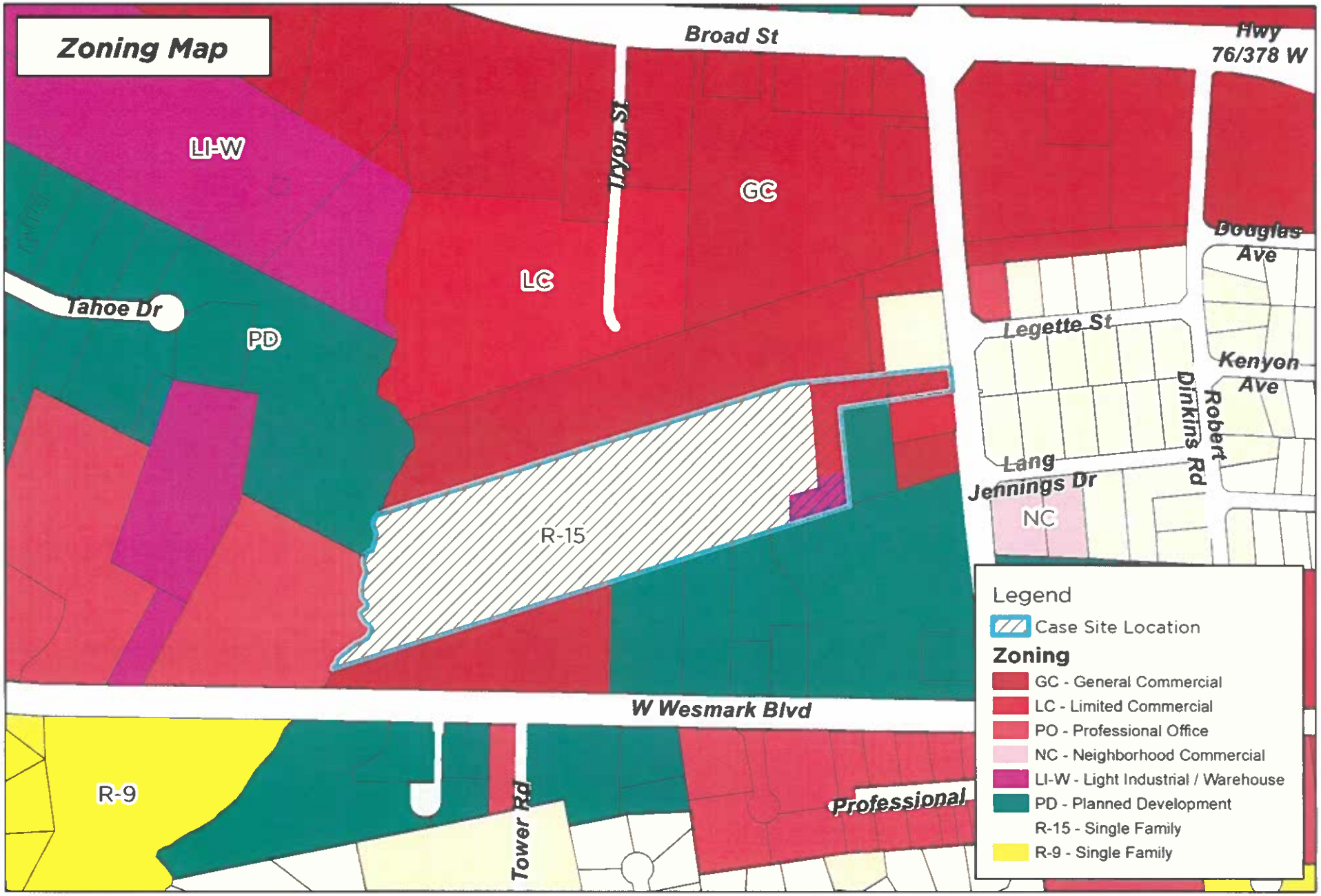

DISCLAIMER: While the data of this map has been tested for accuracy the Sumter-City County Planning Commission disclaims any or all responsibility for the exact accuracy or correctness of the map. The Sumter City-County Planning Commission shall not become liable to the user of this map for any reason. In using this map, the user agrees to hold the Sumter City-County Planning Commission harmless of any or all liabilities arising from the use of this map and/or its data.

0 200 400 Feet

1 inch = 400 feet

Map Prepared by: Sumter Planning Department
Copyright 2025
Date: 8/20/2025
User Name: crobbins
Document Name: BOA-25-26

Sumter SOUTH CAROLINA

BOA-25-26
1242 Alice Dr, Sumter, SC 29150
Tax Map # 203-00-05-004 & 203-11-02-135

Highway Corridor Protection District Map

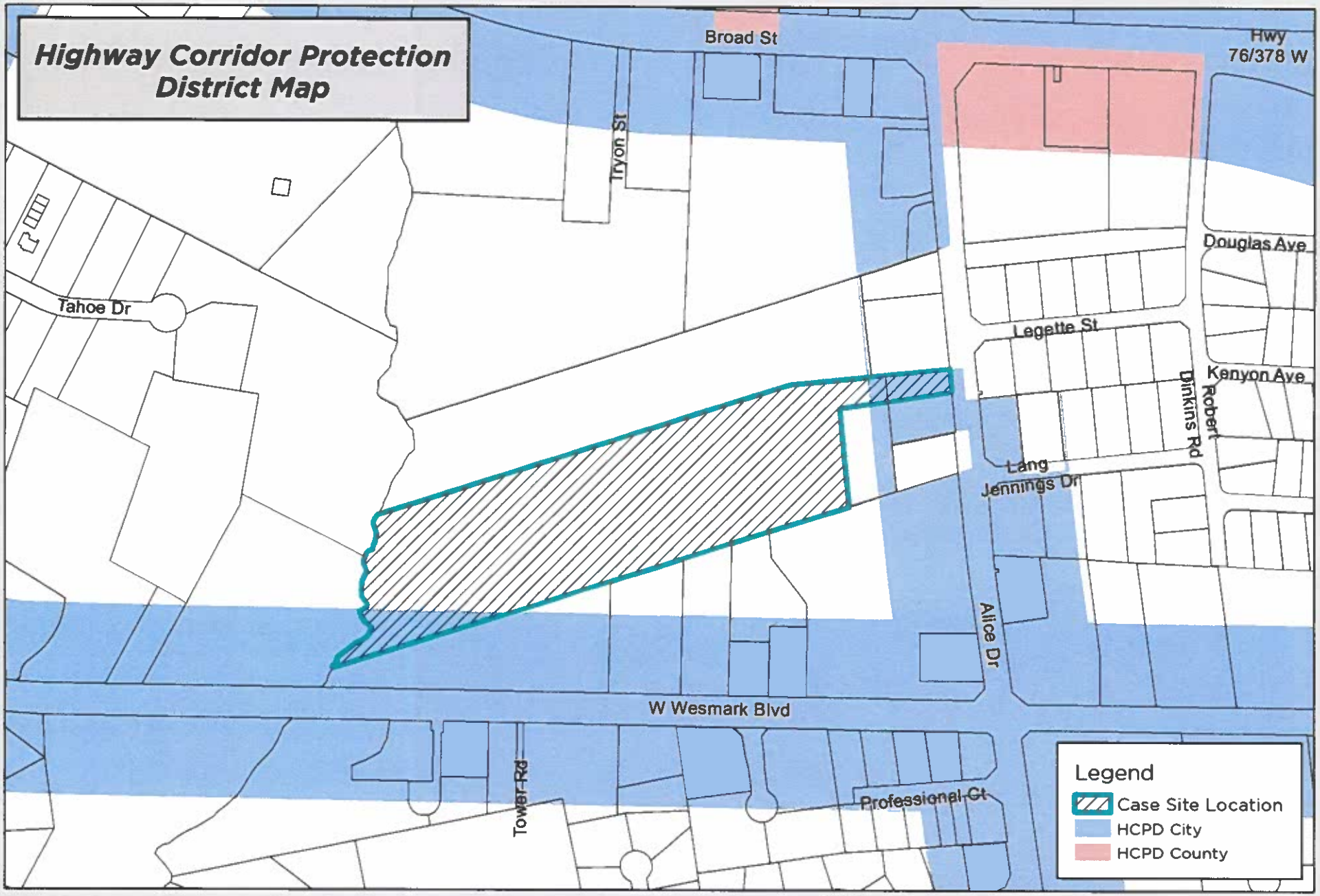

DISCLAIMER: While the data of this map has been tested for accuracy, the Sumter-City County Planning Commission disclaims any or all responsibility for the exact accuracy or correctness of the map. The Sumter City-County Planning Commission shall not become liable to the user of this map for any reason. In using this map, the user agrees to hold the Sumter City-County Planning Commission harmless of any or all liabilities arising from the use of this map and/or its data.

0 200 400 Feet

1 inch = 400 feet

Map Prepared by: Sumter Planning Department
Copyright 2025
Date: 8/20/2025
User Name: crobbins
Document Name: BOA-25-26

Sumter SOUTH CAROLINA

BOA-25-26
1242 Alice Dr, Sumter, SC 29150
Tax Map # 203-00-05-004 & 203-11-02-135

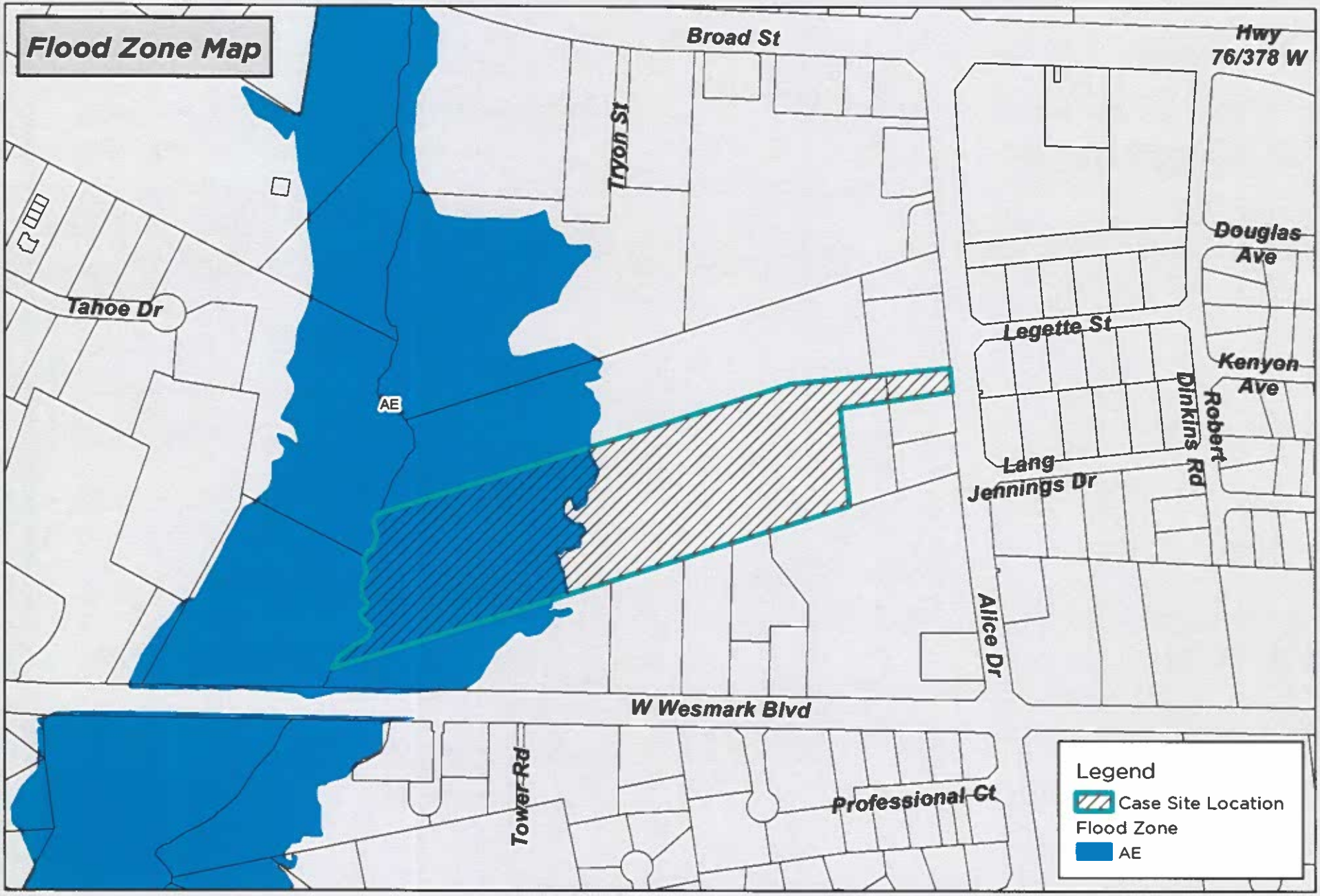

DISCLAIMER: While the data of this map has been tested for accuracy, the Sumter-City County Planning Commission disclaims any or all responsibility for the exact accuracy or correctness of the map. The Sumter City-County Planning Commission shall not become liable to the user of this map for any reason. In using this map, the user agrees to hold the Sumter City-County Planning Commission harmless of any or all liabilities arising from the use of this map and/or its data.

0 200 400 Feet

1 inch = 400 feet

Map Prepared by: Sumter Planning Department
Copyright 2025
Date: 8/20/2025
User Name: crobbins
Document Name: BOA-25-26

Sumter SOUTH CAROLINA

BOA-25-26
1242 Alice Dr, Sumter, SC 29150
Tax Map # 203-00-05-004 & 203-11-02-135