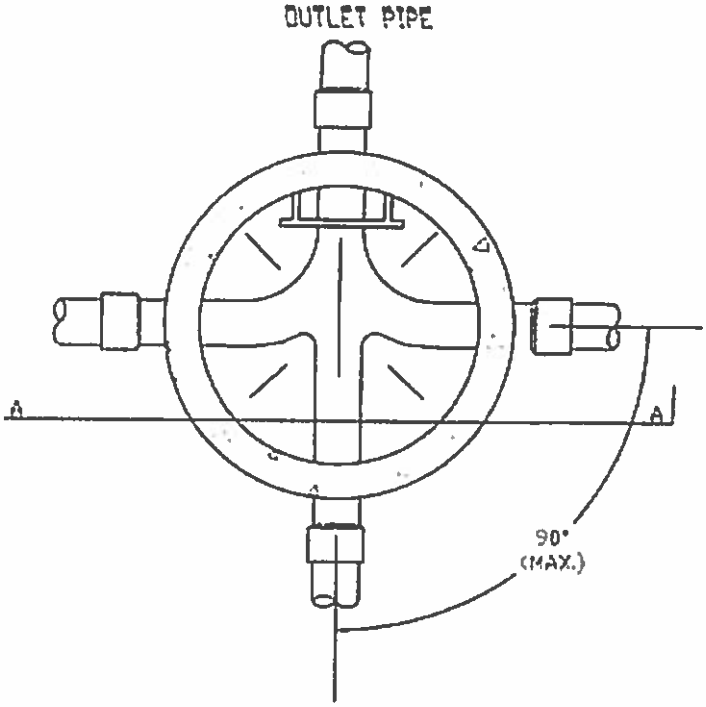

PLAN

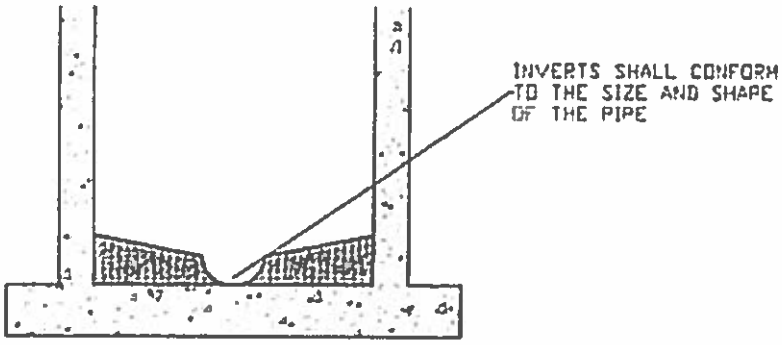

SECTION A - A

NOTE:
SHAPE ALL INVERTS AND TROWEL SMOOTH

MANHOLE INVERT SCALE: NO SCALE

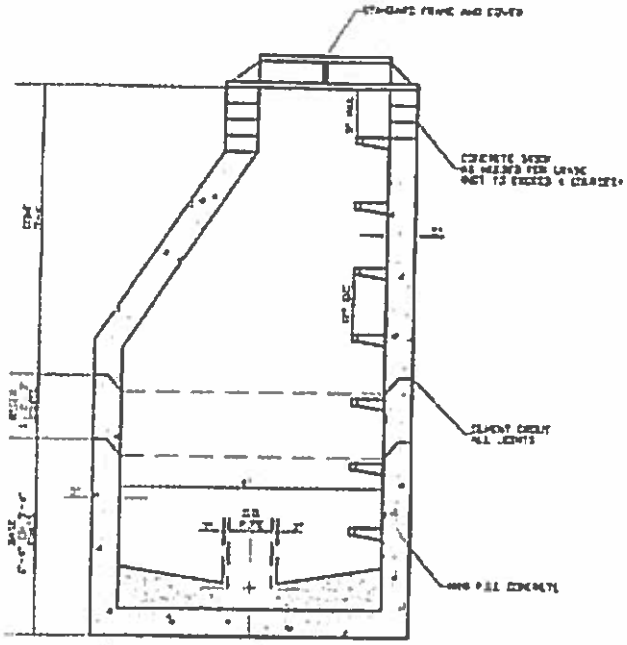

STANDARD PRECAST MANHOLE
WITH CONCRETE BOTTOM (NTS)

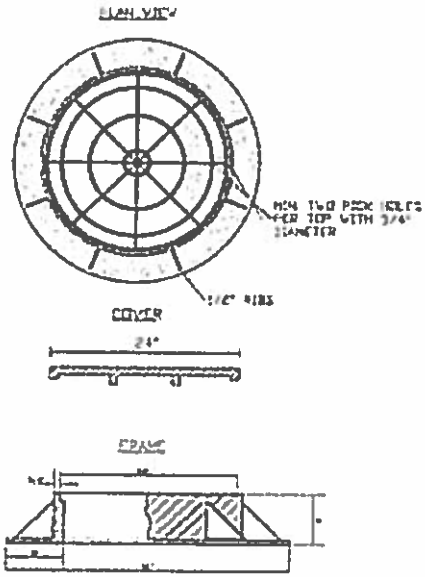

STANDARD FRAME AND COVER DETAIL (NTS)

CITY OF SUMTER ENGINEERING

SEWER DETAIL

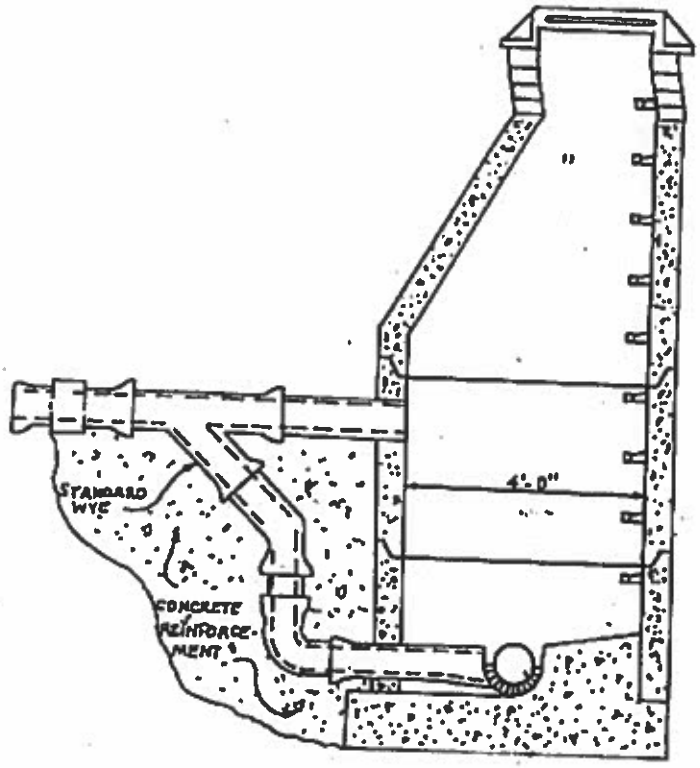

STANDARD PRECAST CONCRETE DROP MANHOLE
N.T.S.

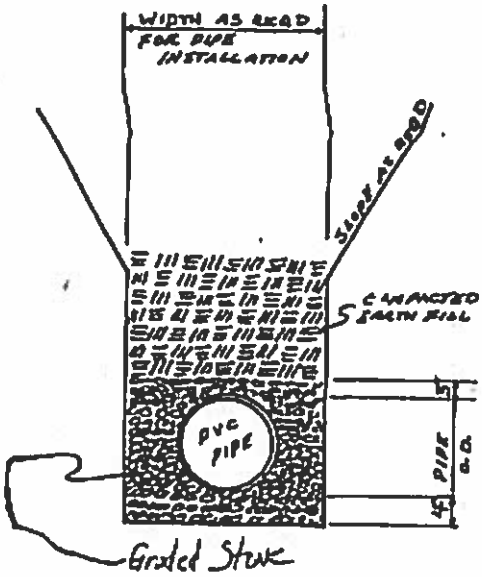

PVC BEDDING DETAIL
N.T.S.

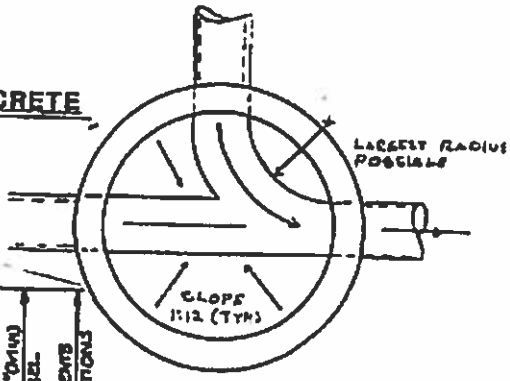

PLAN DETAIL
CURVED INVERT.

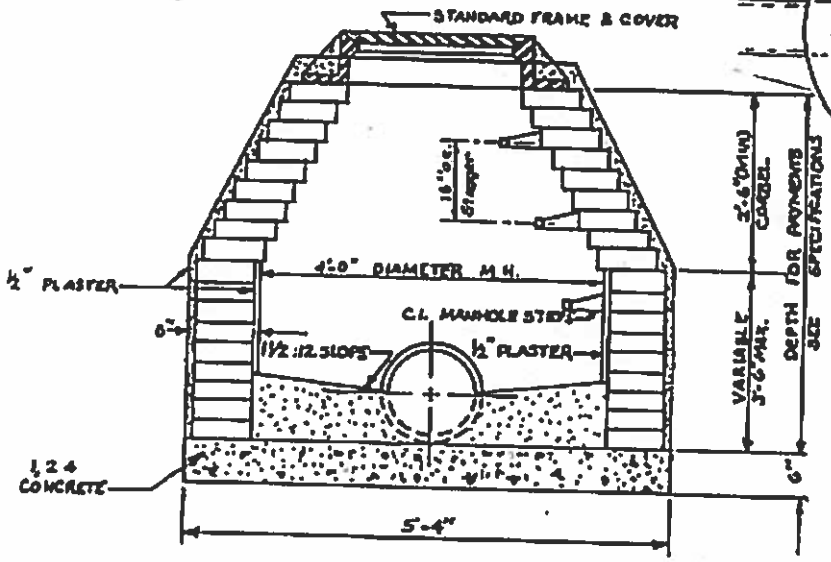

STANDARD MANHOLE
8'-0" DEEP AND UNDER
SCALE: 1/4" = 1'-0"

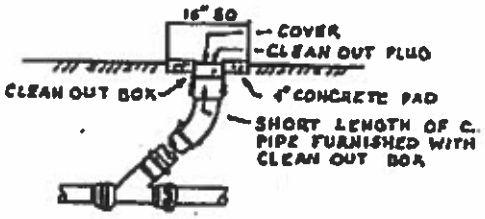

CLEAN OUT DETAIL
N.T.S.