May 17, 2016

To Whom It May Concern:

The City of Sumter is soliciting ***SEALED*** bids for the items listed below. Please list the cost of each item separately. Delivery charges and taxes will also be listed separately. All bids ***MUST*** be received by the Purchasing Department on or before 2:30 PM on June 23, 2016 in the City of Sumter Opera House. ***SEALED*** Bids may be mailed, FedEx, UPS or hand delivered. Bids that are e-mailed or faxed will be deemed as unresponsive and rejected.

Quantity **Size/Description/Specs/Details**

*PLEASE SEE ATTACHMENT FOR QUANTITIES, DESCRIPTION, DETAILS AND SPECIFICATIONS.

*ALL BIDS MUST SPECIFY PER UNIT COST WHEN SHOWN IN SPECIFICATIONS, IF APPLICABLE. DO NOT PROVIDE LUMP SUM ONLY IF YOU CAN PROVIDE UNIT COST.

*ALL DEVIATIONS FROM REQUESTED SPECIFICATIONS MUST BE CLEARLY NOTED ON BID RESPONSE.

*ALL PRICES QUOTED WILL REMAIN VALID FOR ONE YEAR (1 JULY 2016 – 30 JUNE 2016)

The Purchasing Department is located on the 3rd floor in the Opera House at 21 N. Main Street in Sumter, South Carolina 29150.

Anyone wishing to mail bids should address as follows:

City of Sumter Purchasing Department
P.O. Box 1449
Sumter, SC 29151
Attn: Purchasing Department
AITB #5 – 16/17: New Dumpsters and Parts

The bid AITB number and name must appear on the envelope. Please direct questions concerning specifications/items, and to schedule an inspection of the site (if required) to Randolph Paige at 803-795-5661 or email: rpaige@sumter-sc.com or Vernon Miller at (803) 436-2674 or email: vmiller@sumter-sc.com. If you have questions concerning the bid process, call Tony Butts at 803-774-5197 or email (SEE BELOW).

Sincerely,

Anthony J. Butts, Jr. (Tony)
Purchasing Specialist
E-mail: tbutts@sumter-sc.com

CITY OF SUMTER BID FORM

City of Sumter, South Carolina, a Body Politic and Corporate and Political Subdivision of the State of SC
INFORMAL INVITATION-TO-BID: AITB # 5-16/17
NAME OF BID: New Dumpsters and Parts
BID MUST BE RECEIVED BY: Thursday June 23, 2016 at 2:30 pm at below address.

OVERNIGHT OR HAND CARRY TO:
City of Sumter Opera House (City Hall)
Attention: Purchasing Dept.
21 N. Main Street
Sumter, SC 29150
BID: AITB #5-16/17 New Dumpsters and Parts
(The bid AITB number and name must appear on the envelope)

Quantity **Size/Description/Specs/Details**

*PLEASE SEE ATTACHMENT FOR QUANTITIES, DESCRIPTION, DETAILS AND SPECIFICATIONS.
*ALL PRICES QUOTED WILL REMAIN VALID FOR ONE YEAR (1 JULY 2016 – 30 JUNE 2017).

4 Cubic yard, slope-back (with two plastic lids): $ _____ EA

8 Cubic yard, slant container (with hinged, two plastic lids and two metal doors): $_____ EA

8 Cubic yard, slope-back or upright RECYCLING containers with slit in the front, two plastic lids, two metal doors and both doors tack welded before delivery: $_____ EA

8 Cubic yard, slope-back container (with hinged, two plastic lids, two metal doors) $_____ EA

Lock-Bars: $_____ EA

Hinged plastic lids (SOLID PLASTIC LIDE with hinge in middle, (58" x 72.5"): $_____ EA

Plastic Lids: (36 x 58"): $_____ EA

Plastic Lids: (36" x 46"): $_____ EA

Plastic Lids: (36" x 41"): $_____ EA

Plastic Side Doors: (30" x 30"): $_____ EA

Rods, Washers & Pins (for plastic lids): $_____ EA

Freight (per truck load): $_____ EA

SPECIFICATIONS AND MEASUREMENTS START ON PAGE 6.

Delivery To: **City of Sumter Sanitation Department**
303 E. Liberty St.
Sumter, SC 29150

VENDOR NAME:_____

ADDRESS:_____

CITY-STATE-ZIP:_____

TELEPHONE NO:_____ **FAX NO:**_____

FEDERAL ID (TAX ID) NO: _____

AUTHORIZED SIGNATURE (WRITTEN): _____

AUTHORIZED SIGNATURE (TYPED):_____ **DATE**_____

I certify that this bid is made without prior understanding, agreement, or connection with any corporation, firm, or person submitting a bid for the same materials, supplies, or equipment, and is in all respects fair and without collusion or fraud. I agree to abide by all conditions of this bid and verify that I am authorized to sign this bid for the offerer. I further state that the company affiliated with this bid currently complies with all applicable federal and state laws and directives relative to non-discriminatory practices in employment.

The Bidder, in compliance with your Invitation-To-Bid, and having read and understood the Project Documents, and being familiar with all of the conditions surrounding the proposed project, including the availability of materials, labor, and work site environmental conditions, hereby proposes to furnish all permits, labor, materials, supplies, and equipment and to perform the duties in accordance with the contract documents of which this Bid Form is a part.

The undersigned, as Bidder, hereby declares that the only person or persons interested in the Bid as principal(s) is, or are, named herein and that no other person has any interest in the Bid or in the contract to be entered into; that this Bid is made without connection with any other person, company or parties making a bid; and that is in all respects fair and in good faith without collusion or fraud.

The Bidder further proposes and agrees, if this Bid is accepted, to contract with City of Sumter, to furnish all permits, materials, equipment, tools, apparatus, means of transportation, removal, over head, profit insurance, taxes, and other such costs both indirect and direct, and labor necessary hereto, and to complete the proposed project in full and complete accordance with the Project Documents, to the full and entire satisfaction of the Owner, at the prices listed in the Bid Schedule.

Unit prices and/or lump sums are shown in the Bid Schedule section below. In case of error in extension, the Unit Price shall govern rather than the Amount. Where Lump Sum Amounts are bid, the amount for each bid item shall govern rather than the total of any several items.

NOTIFICATION OF PRICE ADJUSTMENTS:
Unit prices offered shall remain firm throughout the term of the contract. Any request for price adjustment, with proper documented justification, shall be submitted in writing to the City of Sumter two weeks prior to the requested date of the price adjustment and will only take effect after the awardee has received written acceptance of price adjustment from the City of Sumter. Any price adjustment invoiced without prior written approval from the City of Sumter shall not be paid and the invoice returned to the awardee for correction. Price adjustments shall be made in good faith with awardees and the City. The City of Sumter reserves the right to reject any price adjustments and cancel the renewal of any contract containing unaccepted increase in prices. NOTE: Price adjustments must be proven and out of the ordinary for contracts one year or less.

VENDOR AGREEMENTS

City of Sumter reserves the right to obtain clarification or additional information necessary to properly evaluate a bid. Failure of vendor to respond to a request for additional information or clarification could result in rejection of that vendor's bid. City of Sumter reserves the right to award proposals received on the basis of individual items, groups of items, or the entire list of items; to reject any and all proposals in whole or in part, and to waive any technicalities. In every case, the City reserves the right to make awards deemed to be in the best interest of the City and to negotiate further the offer determined by the City to be in the best interest of the City. **City of Sumter also reserves the right to make purchases outside of the awarded contracts where it is deemed in the best interest of the City.**

Each responder, by submitting a bid to the City of Sumter a result of this Invitation-to-Bid, agrees to and acknowledges its acceptance of and agreement with the procedures outlined herein and all terms, conditions and requirements of the applicable City of Sumter Bid documents. If a vendor cannot agree to these terms, or violates these procedures, the response will be judged non-responsive and not considered. If the procedures are violated during the evaluation process or prior to the issuance of a contract by the City of Sumter, the offer of the firm in question will be void and City of Sumter will procure the goods/services in question from other eligible vendors.

Responses submitted are final and complete offers by the vendor. No additions, corrections, modifications, changes or interpretations will be allowed. In the event questions arise on what is meant by an offer, the Purchasing Manager will make a determination as to the city's interpretation of the vendor's offer. If, after informing the vendor of the city's opinion, disagreement as to scope of the offer is present, the offer will be declared void.

Unit prices will govern over extended prices. Prices must be stated per unit and extended for the total quantity. Sales, use, or excise tax, as well as any handling and shipping charges, must be shown as separate items.

Responders must clearly mark as "Confidential" each part of their offer which they consider proprietary information that could be exempt from disclosure under Section 30-4-40, Code of Laws of South Carolina, 1976 as amended (Freedom of Information Act). If any part is designated as "confidential", there must be attached to that part an explanation of how this information fits within one or more categories listed in Section 30-4-40. City of Sumter reserves the right to determine whether this information should be exempt from disclosure and no legal action may be brought against City of Sumter or its agents for its determination in this regard

The Owner reserves the right to increase or decrease the amount of work under the Contract at the unit prices quoted in the bid received from the successful responder.

The responder's attention is directed to the fact that all applicable Federal, State and Local laws, statutes, ordinances, and the rules and regulations of all authorities having jurisdiction over the project shall apply to the contract and the project throughout, and they will be deemed to be included in the contract the same as though herein written out in full.

The Responder agrees to secure at Responder's own expense all personnel necessary to carry out Responder's obligations under this Bid. Such personnel shall not be deemed to be employees of the City nor shall they or any of them have or is deemed to have any direct contractual relationship with the City. Responder shall obtain and maintain all licenses and permits required by law for performance of this contract by him.

Upon award of the contract or Purchase Order, the bidder shall maintain, throughout the performance of its obligations a policy of Worker's Compensation insurance with such limits as may be required by SC law, and a policy or policies of general liability insurance insuring against liability for injury to, and death of, persons and damage to, destruction of, property arising out of, or based upon, any act or omission of the bidder or any of its subcontractors of their respective officers, directors employees or agents.

Such liability insurance shall have limits sufficient to cover any loss or potential loss resulting from this contract. City of Sumter must be listed as additional insured. The certificate must allow a minimum of a 30 day written notice of cancellation. Bidder shall provide a Certificate of Insurance to the City of Sumter Purchasing offices prior to start of work.

The bidder shall satisfy itself as to the actual requirements of the bid by personal examination of its location or other means, so as to enable the bidder to make an informed bid. Failure to do so shall not relieve the successful bidder of its obligation to furnish all materials, products, and/or labor necessary to complete the provision of the awarded contract and failure to do so may result in the claims against bonds. No allowance will be made for any claims that a bid and/or response was based on incomplete information as to the nature and character of the sites and of the work involved.

The responder shall indemnify, defend and hold harmless City of Sumter, its officers, agents and employees from liability and any claims, suits, judgments, and damages of any nature brought because of, arising out of, or due to breach of the agreement by Responder, its subcontractors, suppliers, agents, or employees or due to any negligent act or occurrence or any omission or commission of Responder, its subcontractors, suppliers, agents, or employees.

The successful responder shall indemnify and hold harmless the City of Sumter, its officers, agents and employees from all suits or claims of any character resulting from patent, trademark or copyright infringement or accidents/injury at any point in the delivery of goods/services.

Should any responder fail to perform or comply with any provision or terms and conditions of any documents referenced and made part hereof, City of Sumter may terminate this contract, in whole or in part, and may consider such failure or non compliance a breach/default of contract.

City of Sumter may terminate this agreement with or without cause at anytime. In the event of termination by either party, uncontested fees due for services satisfactorily performed or goods accepted prior to the termination shall be paid.

Upon award of a contract or Purchase Order under this bid, the person, partnership, association, or corporation to whom the award is made must comply with the laws of South Carolina, which require such person or entity to be authorized and/or licensed to do business in this state. Notwithstanding the fact that applicable statutes may exempt or exclude the successful responder from requirements that it be authorized and/or licensed to do business in this state, by submission of this signed proposal, the responder agrees to subject itself to the jurisdiction and process of the courts of the State of South Carolina, to all matters and disputes arising or to arise under the contract and performance thereof, including any questions as to the liability for taxes, licenses, or fees levied by the State.

4 YARD SLOPE BACK

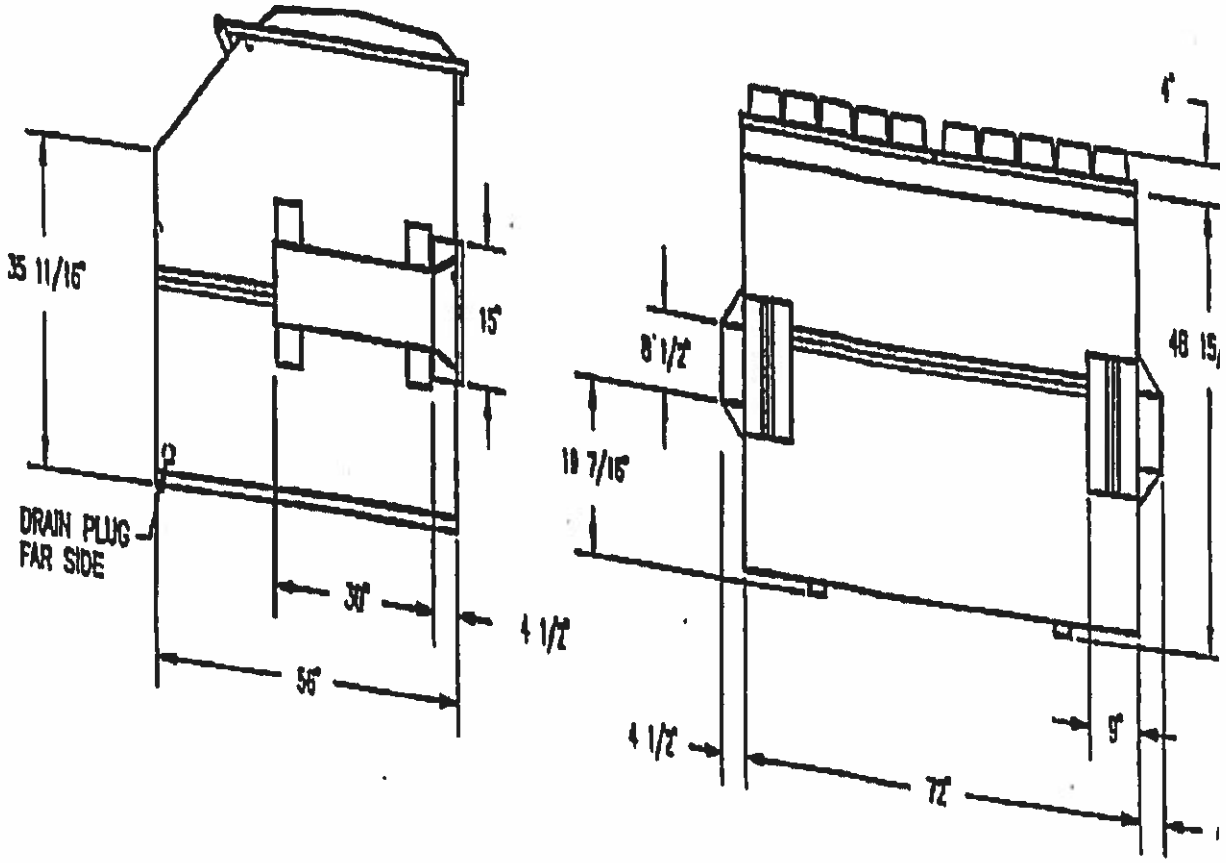

MATERIAL SPECIFICATIONS:

- -SIDES 12 GA.
- -BOTTOM 10 GA.
- -SLEEVES 7 GA.
- -TOP CHANNEL & RUNNERS C3 X

8 YARD RECYCLE

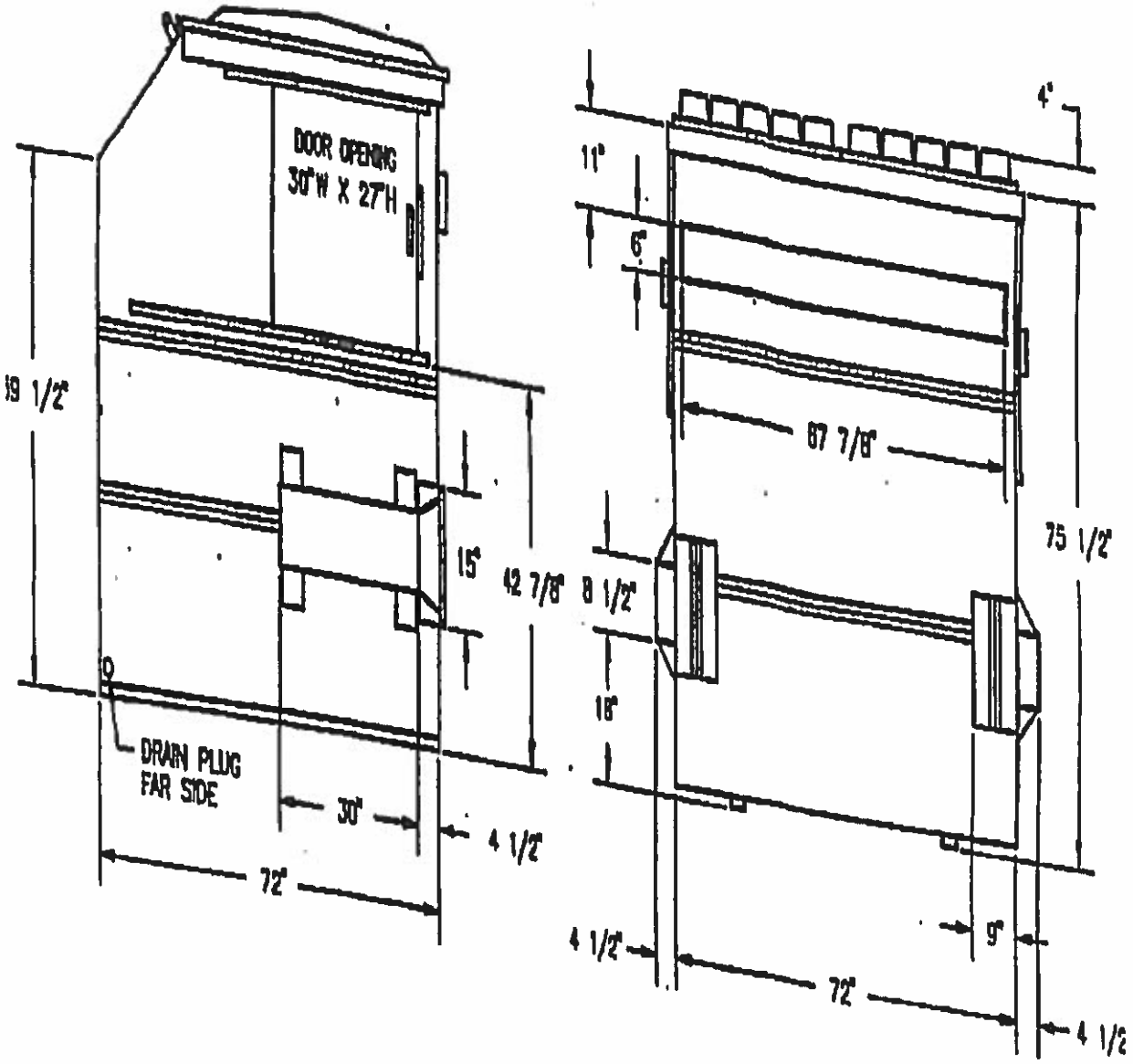

MATERIAL SPECIFICATIONS:

- -SIDES 12 GA.
- -BOTTOM 10 GA.
- -SLEEVES 7 GA.
- -TOP CHANNEL & RUNNERS C3 X

8 YARD SLANT

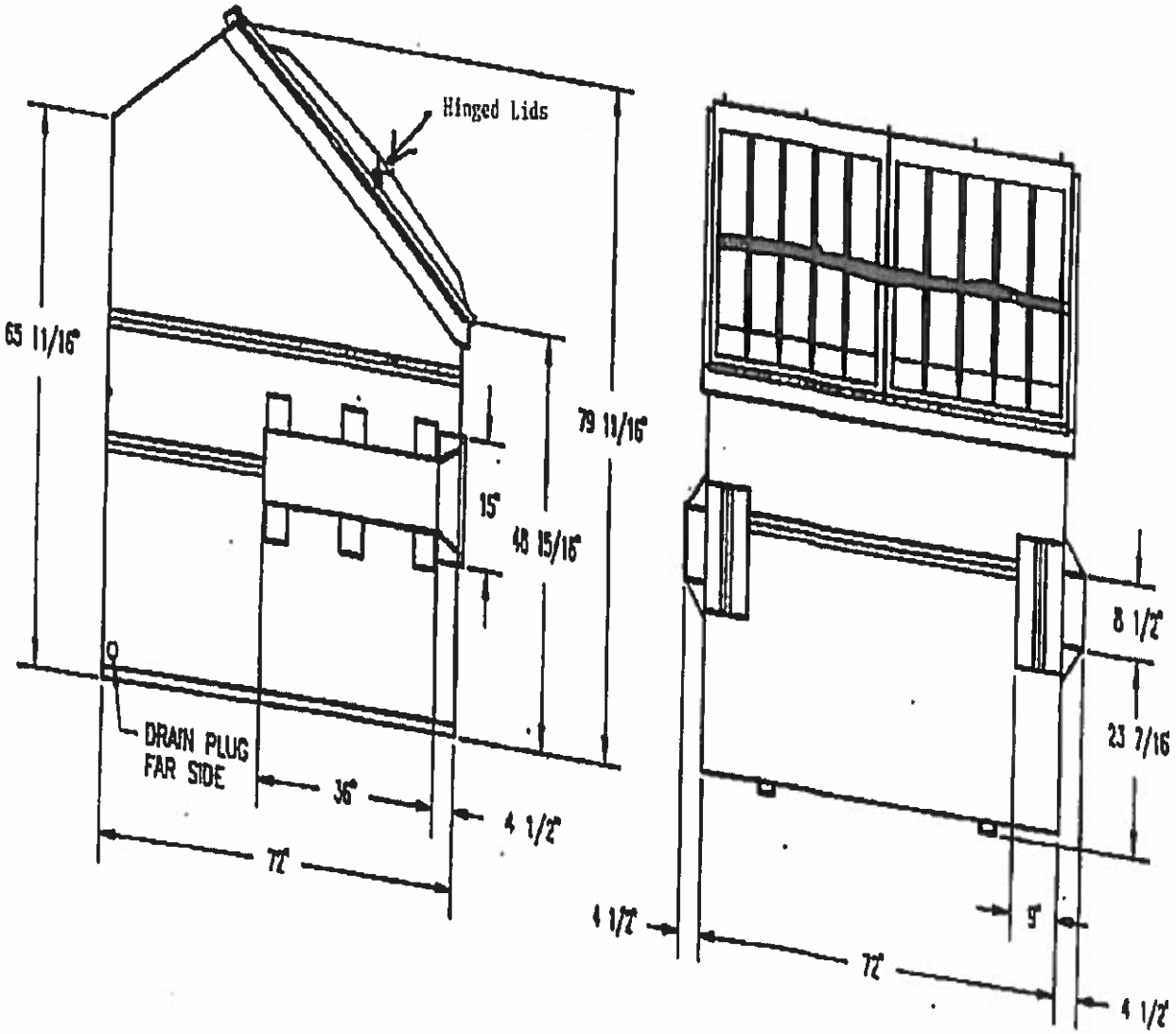

MATERIAL SPECIFICATIONS:

- -SIDES 12 GA.
- -BOTTOM 10 GA.
- -SLEEVES 7 GA.
- -TOP CHANNEL & RUNNERS C3 X

8 YARD UPRIGHT (SLOPE BACK)

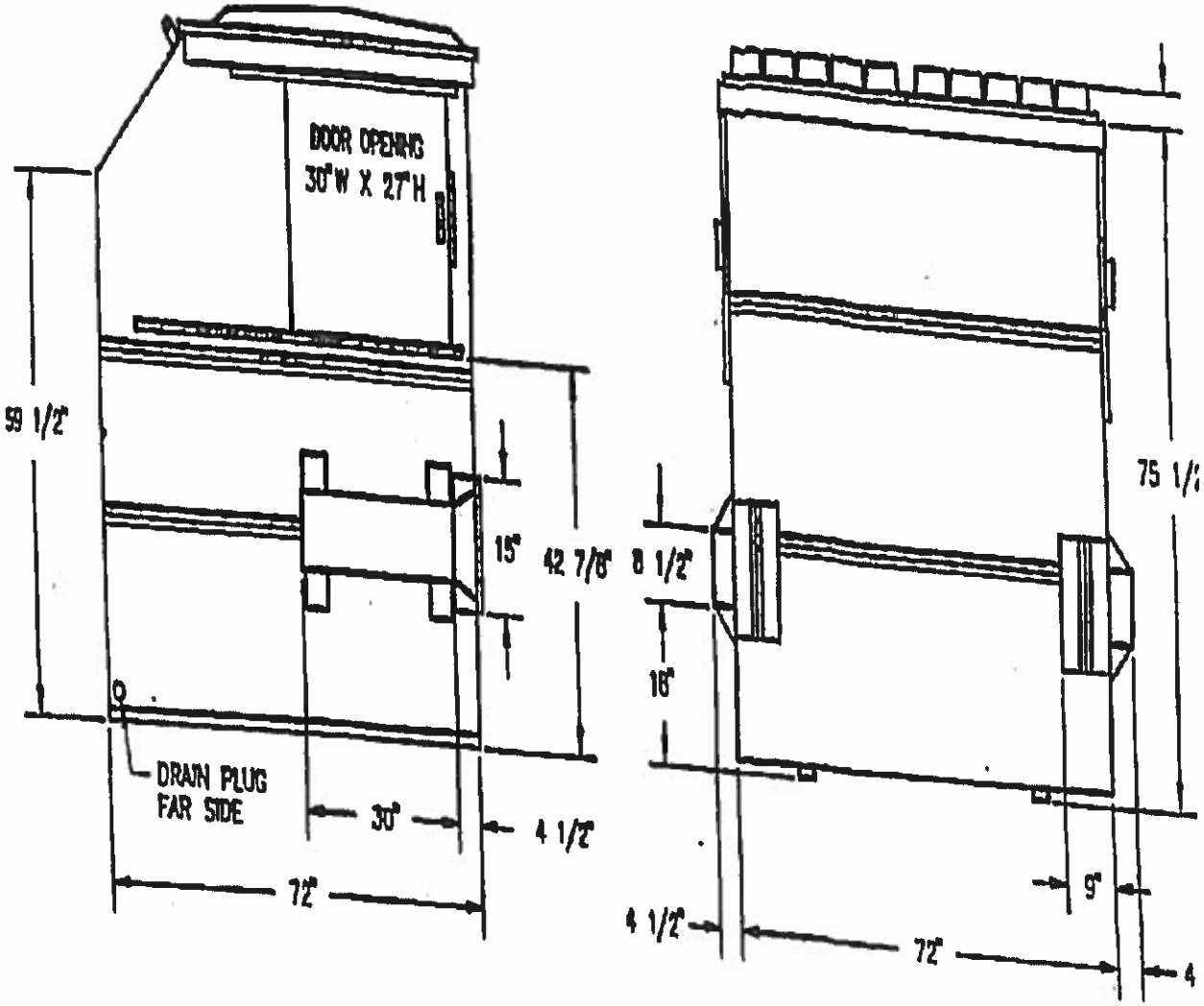

MATERIAL SPECIFICATIONS:

- SIDES 12 GA.
- BOTTOM 10 GA.
- SLEEVES 7 GA.
- TOP CHANNEL & RUNNERS C3 X